Commercial Dryers

Metered and Nonmetered

Refer to Page 3 for Model Numbers

Parts

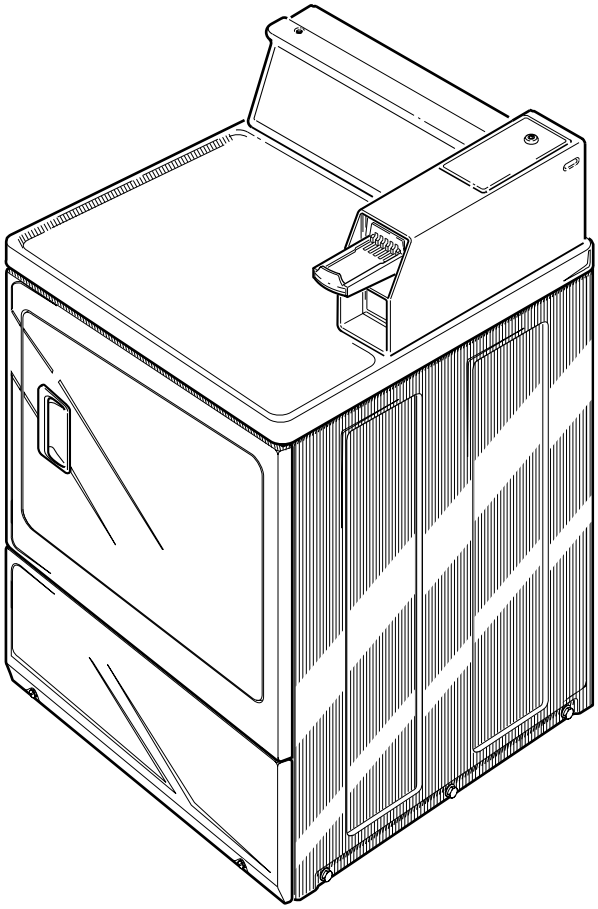

D304P_505026

Alliance Laundry Systems

www.comlaundry.com

Part No. 505026R2
June 2005

Table of Contents

Title	Page
Parts Ordering Information	2
Nameplate Location	2
Model Identification	3
Timer, Plate, Case and Knob - Nonmetered Models	4
Service Door and Meter Case - Coin Slide Models	6
Service Door and Meter Case - Coin Drop Models	8
Timer, Plate and Case - Prep for Card Reader Models	10
Security Case and Card Reader	12
Control Panel, Control Hood and Controls - Electromechanical Control Models	14
Control Panel, Control Hood and Controls - Electronic Control Models	16
Cabinet Top	18
Loading Door	20
Lower Access Panel, Front Panel and Seal	22
Motor, Exhaust Fan and Belt	24
Front Bulkhead, Air Duct, Felt Seal and Cylinder	26
Rear Bulkhead, Felt Seal, Cylinder Roller and Terminal Block	28
Heater Duct and Element Assembly	30
Heater Duct Assembly	32
Heater Duct Assembly - Australian Gas Models	34
Gas Valve, Igniter and Gas Conversion Kits	36
Gas Valve, Igniter and Gas Conversion Kits - Australian and CE Gas Models	38
Cabinet, Exhaust Duct and Base	40
Label Location on Rear of Cabinet	42
Terminal Block and Terminals	44
Terminals	46
Motor Connection Block and Tools	48
Wire Harnesses and Wires	50
Parts Index	51

© Copyright 2005, Alliance Laundry Systems LLC

All rights reserved. No part of the contents of this book may be reproduced or transmitted in any form or by any means without the expressed written consent of the publisher.

Parts Ordering Information

If literature or replacement parts are required, contact the source from whom the machine was purchased or contact Alliance Laundry Systems at (920) 748-3950 for the name and address of the nearest authorized parts distributor.

For technical assistance, call (920) 748-3121.

Nameplate Location

When calling or writing about your product, be sure to mention model and serial numbers. Model and serial numbers are located on nameplate(s) as shown.

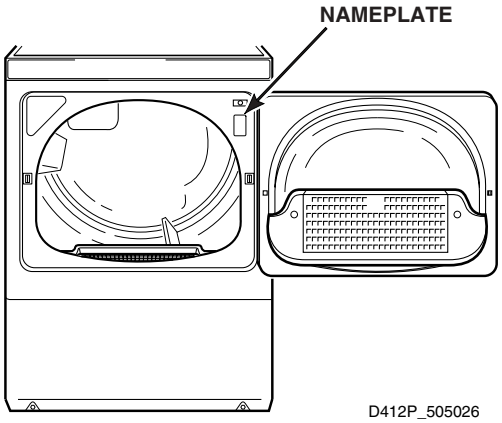

© Copyright, Alliance Laundry Systems LLC – DO NOT COPY or TRANSMIT

Model Identification

Information in this manual is applicable to these dryer models:

HDE007*A1702	HDE107*C3000	HDE707*C1702	HDG509*A1102	SDE107*B3018
HDE007*A3000	HDE507*A1502	HDG009*A1102	HDG509*C1102	SDE407*A3000
HDE007*B3003	HDE507*A1702	HDG009*A3000	HDG609*A1102	SDE407*A4350
HDE007*B3008	HDE507*C1502	HDG009*A3008	HDG709*A1102	SDG009*A3000
HDE007*B3010	HDE507*C1702	HDG009*B3008	HDG709*C1102	SDG009*A3058
HDE007*C1702	HDE607*A1502	HDG009*C1102	SDE007*A3000	SDG109*A1124
HDE007*C3000	HDE607*A1702	HDG009*C3000	SDE007*A4350	SDG109*A3000
HDE107*A1502	HDE607*C1502	HDG109*A1102	SDE007*B3018	SDG109*A3058
HDE107*A1702	HDE607*C1702	HDG109*A3000	SDE107*A1724	SDG109*A5412
HDE107*A3000	HDE707*A1502	HDG109*B3013	SDE107*A3000	SDG109*B3013
HDE107*B3018	HDE707*A1702	HDG109*C1102	SDE107*A4350	SDG409*A3000
HDE107*C1502	HDE707*C1502	HDG109*C3000	SDE107*A5412	SDG409*A3058
HDE107*C1702				

*** Add Letter To Designate Color. L - Almond W - White**

© Copyright, Alliance Laundry Systems LLC – DO NOT COPY or TRANSMIT

Timer, Plate, Case and Knob - Nonmetered Models

Models HDE007*A1702, HDE007*A3000, HDE007*B3003, HDE007*B3008, HDE007*B3010, HDE007*C1702, HDE007*C3000, HDG009*A1102, HDG009*A3000, HDG009*A3008, HDG009*B3008, HDG009*C1102, HDG009*C3000, SDE007*A3000, SDE007*A4350, SDE007*B3018, SDG009*A3000 and SDG009*A3058

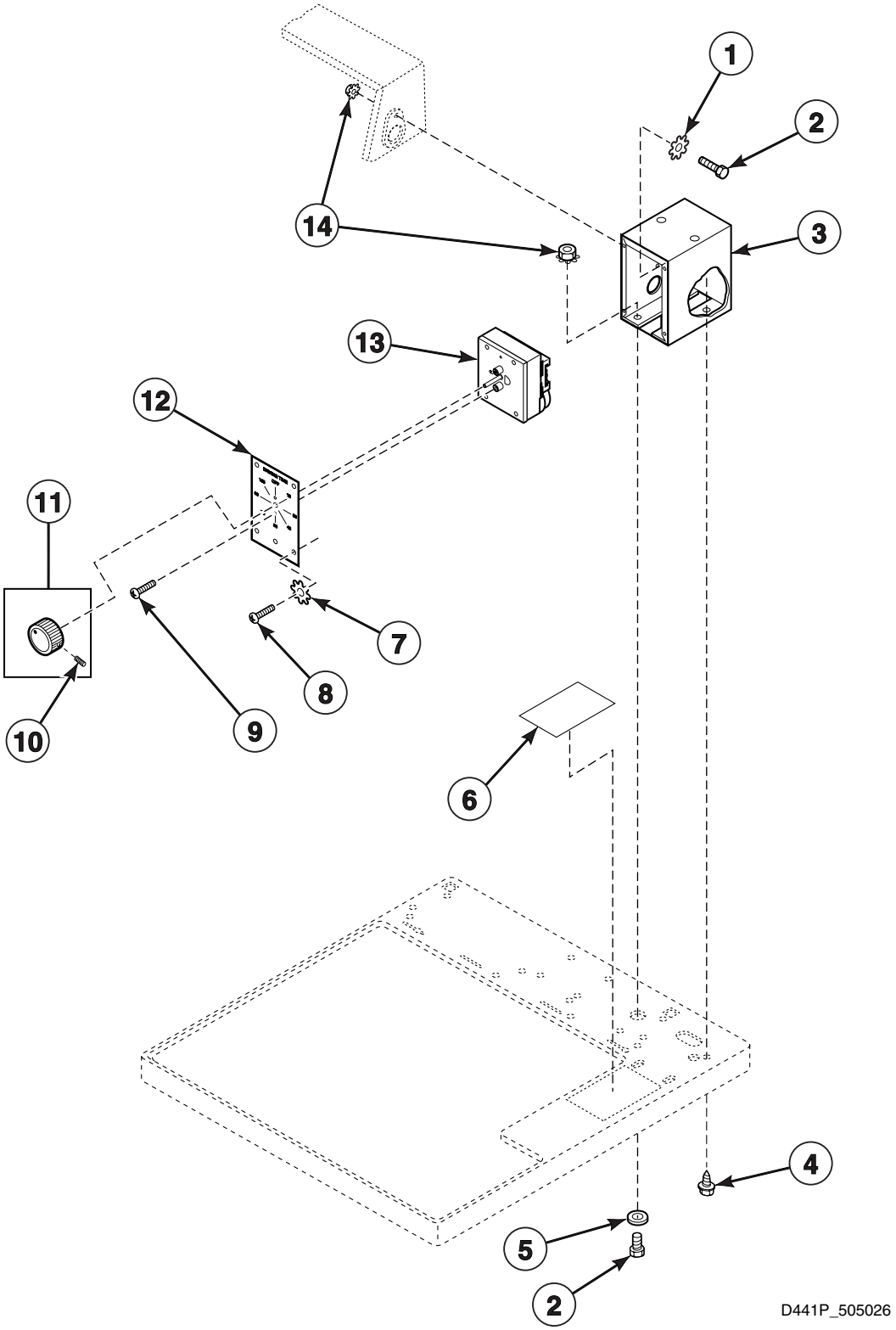

© Copyright, Alliance Laundry Systems LLC – DO NOT COPY or TRANSMIT

Timer, Plate, Case and Knob - Nonmetered Models

REF	PART NO.	DESCRIPTION	COMMENTS
1	02431	Washer	
2	02916	Screw	
3	37733W	Timer Case Assembly	
4	501086	Screw	
5	20279	Washer	
6	500490	Instruction Plate	Models HDE007*A1702, HDE007*A3000, HDE007*C1702, HDE007*C3000, HDG009*A1102, HDG009*A3000, HDG009*A3008, HDG009*C1102, HDG009*C3000, SDE007*A3000, SDE007*A4350, SDG009*A3000 and SDG009*A3058
	502783	Instruction Label	Models HDE007*B3003, HDE007*B3008, HDE007*B3010, HDG009*B3008 and SDE007*B3018
7	03815	Washer	
8	51778	Screw	
9	27328	Screw	
10	N/A	Screw	
11	54678	Timer Knob	Includes item 10
12	500921W	Timer Plate Assembly	White
13	510524	Timer	120 Volt/60 Hertz; Models HDE007*A1702, HDE007*C1702, HDG009*A1102 and HDG009*C1102
	510525	Timer	240 Volt/50 Hertz; Models HDE007*A3000, HDE007*B3003, HDE007*B3008, HDE007*B3010, HDE007*C3000, HDG009*A3000, HDG009*A3008, HDG009*C3000, SDE007*A3000, SDE007*A4350, SDE007*B3018, SDG009*A3000 and SDG009*A3058
	510526P	Timer	24 Volt/50 Hertz; Model HDG009*B3008
14	29786	Nut	

*** Add Letter To Designate Color. L - Almond W - White**

N/A = Part no longer available

© Copyright, Alliance Laundry Systems LLC – DO NOT COPY or TRANSMIT

Service Door and Meter Case - Coin Slide Models

Models HDE107*A1502, HDE107*A1702, HDE107*A3000, HDE107*B3018, HDE107*C1502, HDE107*C1702, HDE107*C3000, HDG109*A1102, HDG109*A3000, HDG109*B3013, HDG109*C1102, HDG109*C3000, SDE107*A1724, SDE107*A3000, SDE107*A4350, SDE107*A5412, SDE107*B3018, SDG109*A1124, SDG109*A3000, SDG109*A3058, SDG109*A5412 and SDG109*B3013

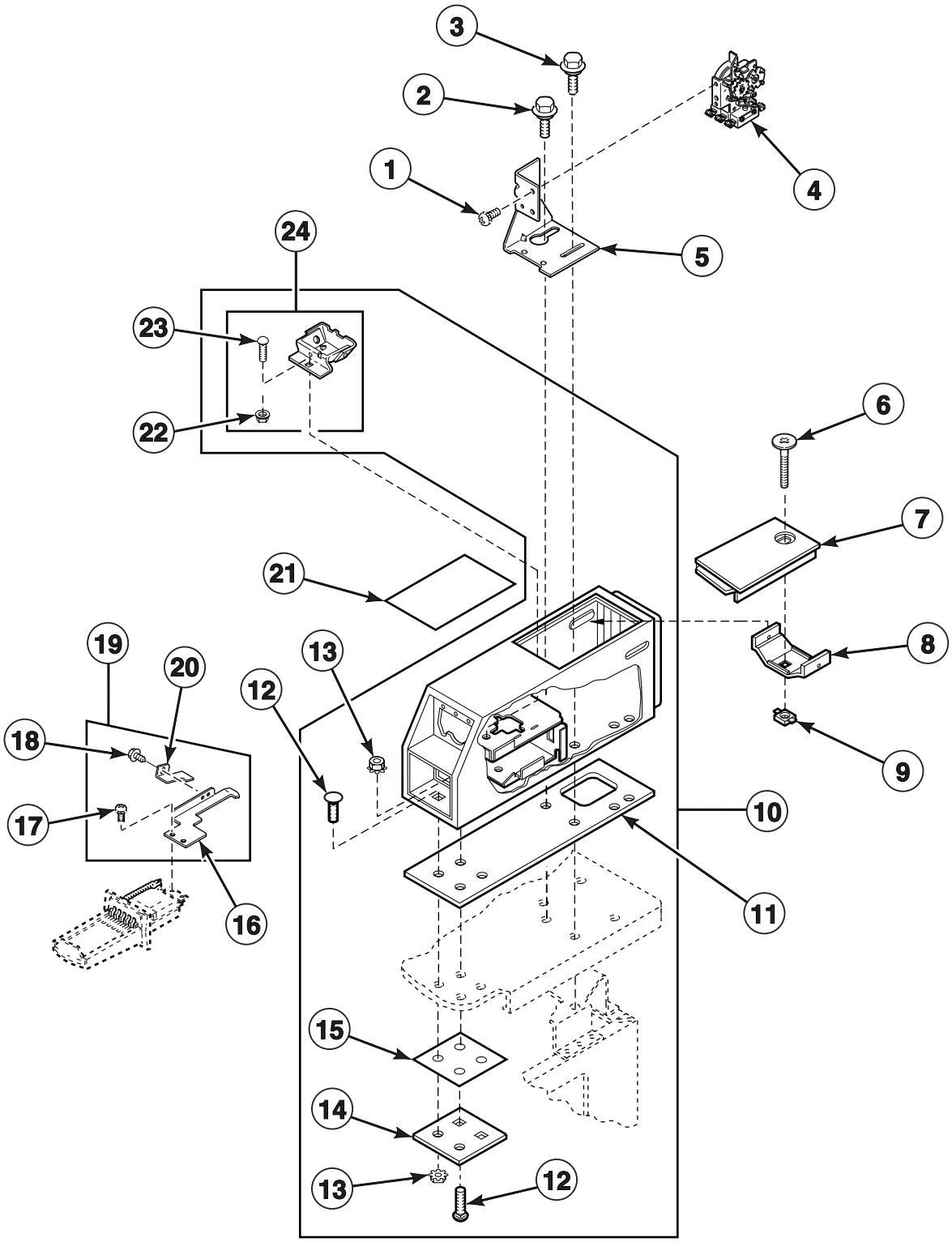

D336P_505026

© Copyright, Alliance Laundry Systems LLC – DO NOT COPY or TRANSMIT

Service Door and Meter Case - Coin Slide Models

REF	PART NO.	DESCRIPTION	COMMENTS
1	03203	Screw	
2	502431	Screw	
3	36048	Screw	
4	501757	Timer	120 Volt/60 Hertz; Models HDE107*A1502, HDE107*A1702, HDE107*C1502, HDE107*C1702, HDG109*A1102 and HDG109*C1102
	501754	Timer Assembly	240 Volt/50 Hertz; Models HDE107*A3000, HDE107*B3018, HDE107*C3000, HDG109*A3000, HDG109*C3000, SDE107*A1724, SDE107*A3000, SDE107*A4350, SDE107*A5412, SDE107*B3018, SDG109*A1124, SDG109*A3000, SDG109*A3058 and SDG109*A5412
	510632P	Accumulator Kit	24 Volt/50 Hertz; Models HDG109*B3013 and SDG109*B3013
5	503315	Timer Bracket	
6	503673	Screw	
7	35798W	Service Door Assembly	White
	35798L	Service Door Assembly	Almond
8	30642	Meter Case Locking Bracket	
9	30647	Nut	
10	524P3W	Meter Case and Funnel Kit	White; Includes items 11-15 and 24
	524P3L	Meter Case and Funnel Kit	Almond; Includes items 11-15 and 24
11	26354	Meter Case Gasket	
12	02505	Bolt	
13	29786	Nut	
14	35525	Meter Case Lockdown Bracket	
15	35526	Meter Case Bracket Gasket	
16	503733	Coin Slide Extension	
17	03950	Screw	
18	501086	Screw	
19	553P3	Slide Extension Kit	Includes items 16-18 and 20
20	501796	Slide Extension Modifier	
21	500628	Instruction Label	Models HDE107*A1502, HDE107*A1702, HDE107*A3000, HDE107*C1502, HDE107*C1702, HDE107*C3000, HDG109*A1102, HDG109*A3000, HDG109*C1102, HDG109*C3000, SDE107*A1724, SDE107*A3000, SDE107*A4350, SDE107*A5412, SDG109*A1124, SDG109*A3000, SDG109*A3058 and SDG109*A5412
	502783	Instruction Label	Models HDE107*B3018, HDG109*B3013, SDE107*B3018 and SDG109*B3013
22	29796	Nut	
23	29651	Bolt	
24	523P3	Coin Funnel Kit	Includes items 22 and 23

*** Add Letter To Designate Color. L - Almond W - White**

© Copyright, Alliance Laundry Systems LLC – DO NOT COPY or TRANSMIT

Service Door and Meter Case - Coin Drop Models

Models HDE507*A1502, HDE507*A1702, HDE507*C1502, HDE507*C1702, HDG509*A1102, HDG509*C1102, SDE407*A3000, SDE407*A4350, SDG409*A3000 and SDG409*A3058

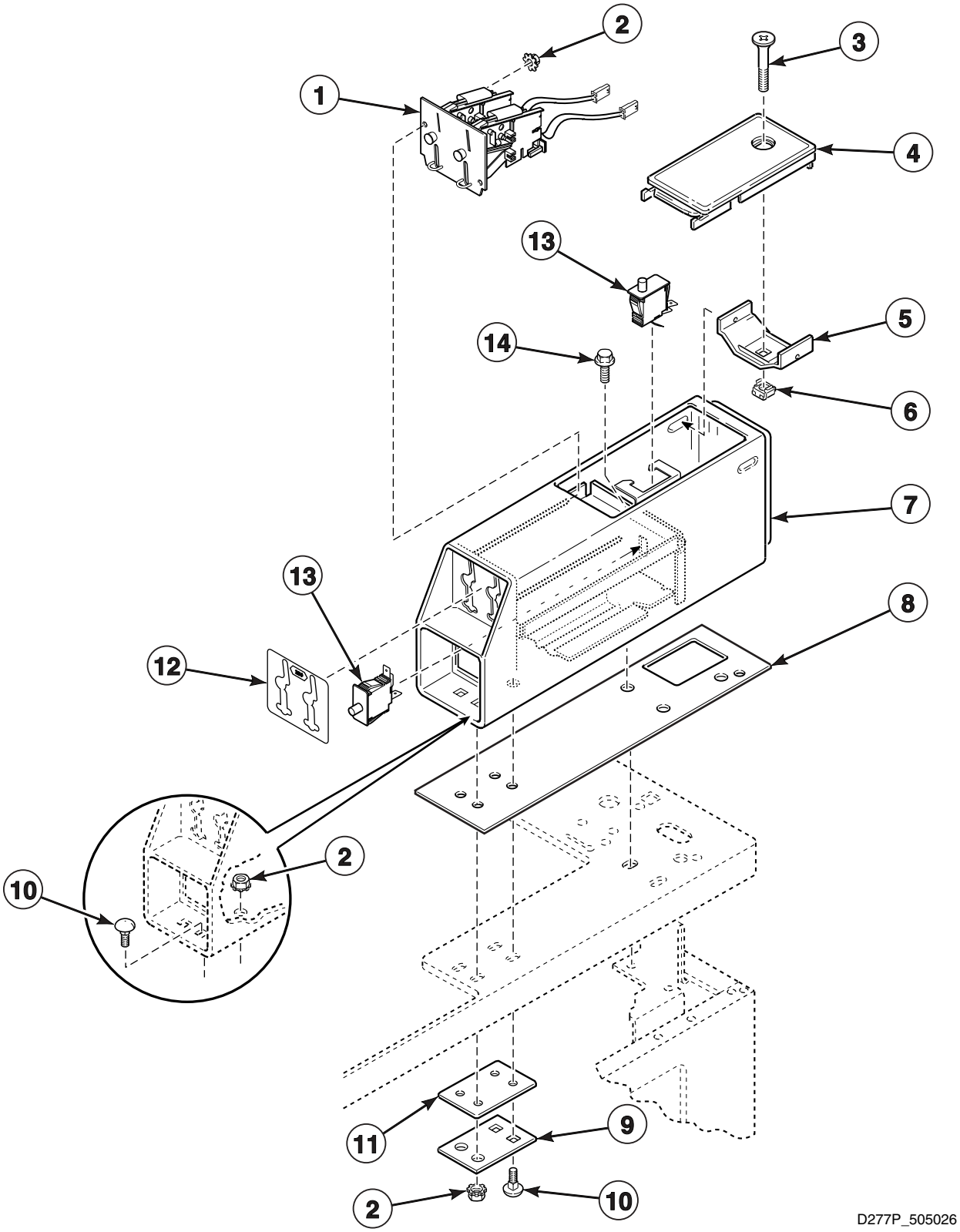

© Copyright, Alliance Laundry Systems LLC – DO NOT COPY or TRANSMIT

Service Door and Meter Case - Coin Drop Models

REF	PART NO.	DESCRIPTION	COMMENTS
1	200578	Coin Drop Assembly	Dual; Canada; $.25 and $1.00; Models HDE507*A1502, HDE507*A1702, HDE507*C1502, HDE507*C1702, HDG509*A1102 and HDG509*C1102
	38467	Coin Drop Assembly	Dual; Australia; $.20 and $1.00
	N/A	Coin Drop Assembly	Dual; Belgium, Denmark, France, Italy and Taiwan
	38464	Coin Drop Assembly	Single; Canada; $.25
	38472	Coin Drop Assembly	Dual; England; .20 and 1 Pound
	38519	Coin Drop Assembly	Dual; Japan; 100 Yen and 500 Yen
	38521	Coin Drop Assembly	Dual; Korea; 100 Won and 500 Won
	38522	Coin Drop Assembly	Dual; New Zealand; $.20 and $1.00
	38462	Coin Drop Assembly	Single; Token; STD-118-1
	38463	Coin Drop Assembly	Single; Token; STD-118-5
	38963	Coin Drop Assembly	Single; Token; 500-118-16
2	29786	Nut	
3	503673	Screw	
4	35798W	Service Door Assembly	White
	35798L	Service Door Assembly	Almond
5	30642	Meter Case Locking Bracket	
6	30647	Nut	
7	38724W	Meter Case Assembly	White
	38724L	Meter Case Assembly	Almond
8	26354	Meter Case Gasket	
9	35525	Meter Case Lockdown Bracket	
10	02505	Bolt	
11	35526	Meter Case Bracket Gasket	
12	39073	Dual Overlay	Models HDE507*A1502, HDE507*A1702, HDE507*C1502, HDE507*C1702, HDG509*A1102 and HDG509*C1102
	38675	Overlay Kit	Single; Models SDE407*A3000, SDE407*A4350, SDG409*A3000 and SDG409*A3058
	38676	Overlay Kit	Dual; Models SDE407*A3000, SDE407*A4350, SDG409*A3000 and SDG409*A3058
13	504570	Switch	
14	36048	Screw	

*** Add Letter To Designate Color. L - Almond W - White**

N/A = Part no longer available

© Copyright, Alliance Laundry Systems LLC – DO NOT COPY or TRANSMIT

Timer, Plate and Case - Prep for Card Reader Models

Models HDE607*A1502, HDE607*A1702, HDE607*C1502, HDE607*C1702 and HDG609*A1102

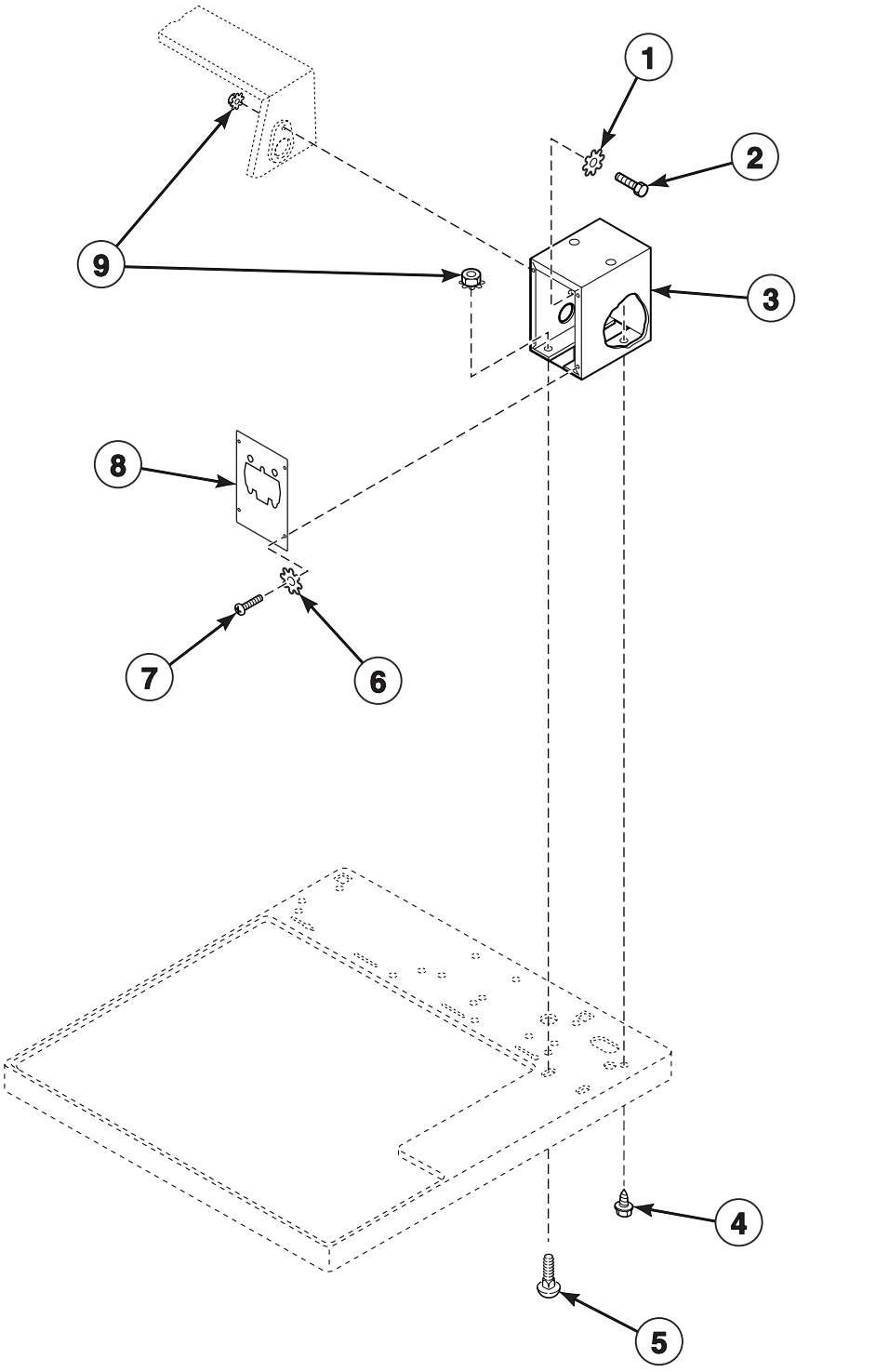

© Copyright, Alliance Laundry Systems LLC – DO NOT COPY or TRANSMIT

Timer, Plate and Case - Prep for Card Reader Models

REF	PART NO.	DESCRIPTION	COMMENTS
1	02431	Washer	
2	02916	Screw	
3	37733W	Timer Case Assembly	White
4	501086	Screw	
5	02505	Bolt	
6	21734	Washer	
7	51778	Screw	
8	39481W	Timer Plate	
9	29786	Nut	

*** Add Letter To Designate Color. L - Almond W - White**

© Copyright, Alliance Laundry Systems LLC – DO NOT COPY or TRANSMIT

Security Case and Card Reader

Models HDE707*A1502, HDE707*A1702, HDE707*C1502, HDE707*C1702, HDG709*A1102 and HDG709*C1102

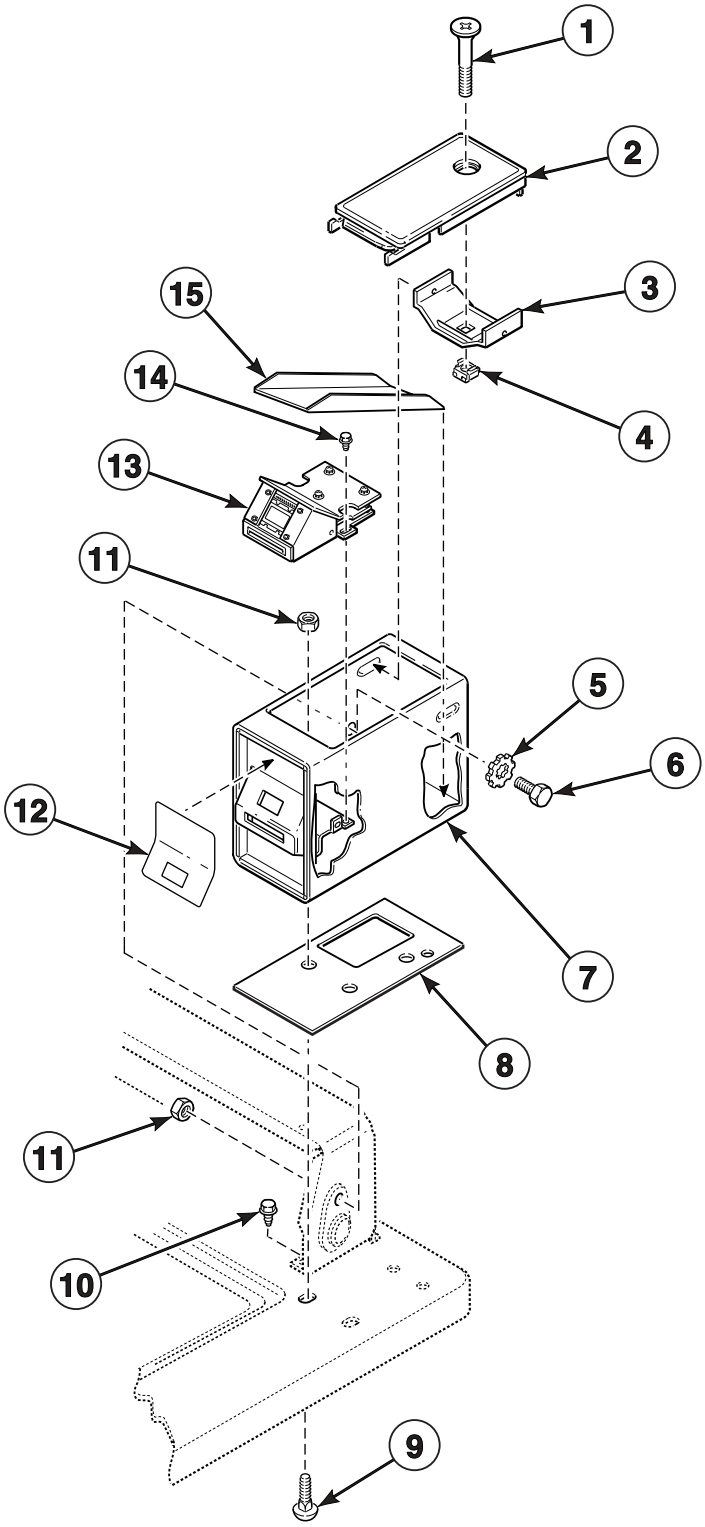

D349PZ3B_505026

© Copyright, Alliance Laundry Systems LLC – DO NOT COPY or TRANSMIT

Security Case and Card Reader

REF	PART NO.	DESCRIPTION	COMMENTS
1	503673	Screw	
2	35798W	Service Door Assembly	White
	35798L	Service Door Assembly	Almond
3	30642	Meter Case Locking Bracket	
4	30647	Nut	
5	02431	Washer	
6	02916	Screw	
7	N/A	Security Case Assembly	
8	37526	Security Case Gasket	
9	02505	Bolt	
10	23962	Screw	
11	29786	Nut	
12	N/A	Instruction Overlay	Models HDE707*C1502, HDE707*C1702 and HDG709*C1102
	39676	Card Reader Overlay	Models HDE707*A1502, HDE707*A1702 and HDG709*A1102
13	39685	Card Reader	Version 2
14	503688	Screw	
15	N/A	Shield	

*** Add Letter To Designate Color. L - Almond W - White**

N/A = Part no longer available

© Copyright, Alliance Laundry Systems LLC – DO NOT COPY or TRANSMIT

Control Panel, Control Hood and Controls - Electromechanical Control Models

Models HDE007*A1702, HDE007*A3000, HDE007*B3003, HDE007*B3008, HDE007*B3010, HDE007*C1702, HDE007*C3000, HDE107*A1502, HDE107*A1702, HDE107*A3000, HDE107*B3018, HDE107*C1502, HDE107*C1702, HDE107*C3000, HDG009*A1102, HDG009*A3000, HDG009*A3008, HDG009*B3008, HDG009*C1102, HDG009*C3000, HDG109*A1102, HDG109*A3000, HDG109*B3013, HDG109*C1102, HDG109*C3000, SDE007*A3000, SDE007*A4350, SDE007*B3018, SDE107*A1724, SDE107*A3000, SDE107*A4350, SDE107*A5412, SDE107*B3018, SDG009*A3000, SDG009*A3058, SDG109*A1124, SDG109*A3000, SDG109*A3058, SDG109*A5412 and SDG109*B3013

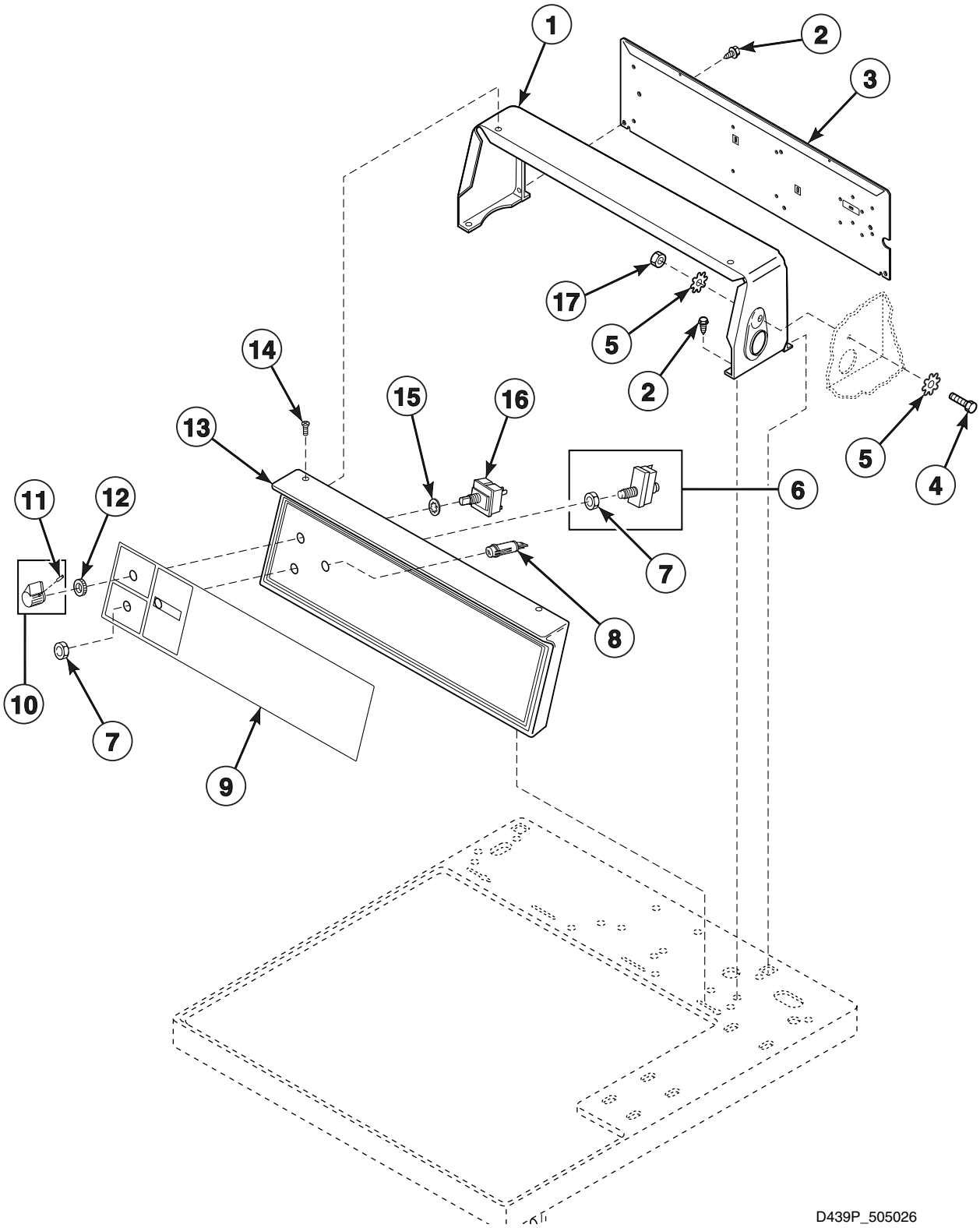

© Copyright, Alliance Laundry Systems LLC – DO NOT COPY or TRANSMIT

Control Panel, Control Hood and Controls - Electromechanical Control Models

REF	PART NO.	DESCRIPTION	COMMENTS
	281P4	Torx Bit	Use with torx head screw
	24161	Bit Holder	Use with torx head screw
1	502567W	Control Hood	White
	502567L	Control Hood	Almond
2	501086	Screw	
3	505798	Hood Back Plate	
4	02916	Screw	
5	02431	Washer	
6	55882	Switch Assembly	Includes item 7
7	52947	Nut	
8	32464	Light	125 Volt; Models HDE007*A1702, HDE007*C1702, HDE107*A1502, HDE107*A1702, HDE107*C1502, HDE107*C1702, HDG009*A1102, HDG009*C1102, HDG109*A1102 and HDG109*C1102
	36967	Light	24 Volt; Models HDG009*B3008, HDG109*B3013 and SDG109*B3013
	38280	Indicator Light	50 Volt; Red; Models HDE007*B3003, HDE007*B3008, HDE007*B3010, HDE107*B3018, SDE007*B3018 and SDE107*B3018
	32519	Light	250 Volt; Purple; All other models
9	511900	Graphic Overlay	Models HDE007*A1702, HDE007*A3000, HDE107*A1502, HDE107*A1702, HDE107*A3000, HDG009*A1102, HDG009*A3000, HDG109*A1102 and HDG109*A3000
	511905	Graphic Overlay	Model HDE007*B3003
	511904	Graphic Overlay	Models HDE007*B3008, HDE007*B3010, HDG009*A3008 and HDG009*B3008
	511897	Graphic Overlay	Models SDE107*A5412 and SDG109*A5412
	511896	Graphic Overlay	Models SDE007*B3018, SDE107*B3018 and SDG109*B3013
	511895	Graphic Overlay	Models SDE007*A3000, SDE007*A4350, SDE107*A3000, SDE107*A4350, SDG009*A3000, SDG009*A3058, SDG109*A3000 and SDG109*A3058
	511901	Graphic Overlay	Models HDE107*B3018 and HDG109*B3013
10	39897	Switch Knob	
11	N/A	Screw	
12	24205	Nut	
13	501738W	Control Panel and Bracket Assembly	White
	501738L	Control Panel and Bracket Assembly	Almond
14	500226	Screw	
	N/A	Screw	Torx head; Optional for added security
15	91176	Washer	
16	61512	Fabric Selector Switch	
17	52566	Nut	

*** Add Letter To Designate Color. L - Almond W - White**

N/A = Part no longer available

© Copyright, Alliance Laundry Systems LLC – DO NOT COPY or TRANSMIT

Control Panel, Control Hood and Controls - Electronic Control Models

Models HDE507*A1502, HDE507*A1702, HDE507*C1502, HDE507*C1702, HDE607*A1502, HDE607*A1702, HDE607*C1502, HDE607*C1702, HDE707*A1502, HDE707*A1702, HDE707*C1502, HDE707*C1702, HDG509*A1102, HDG509*C1102, HDG609*A1102, HDG709*A1102, HDG709*C1102, SDE407*A3000, SDE407*A4350, SDG409*A3000 and SDG409*A3058

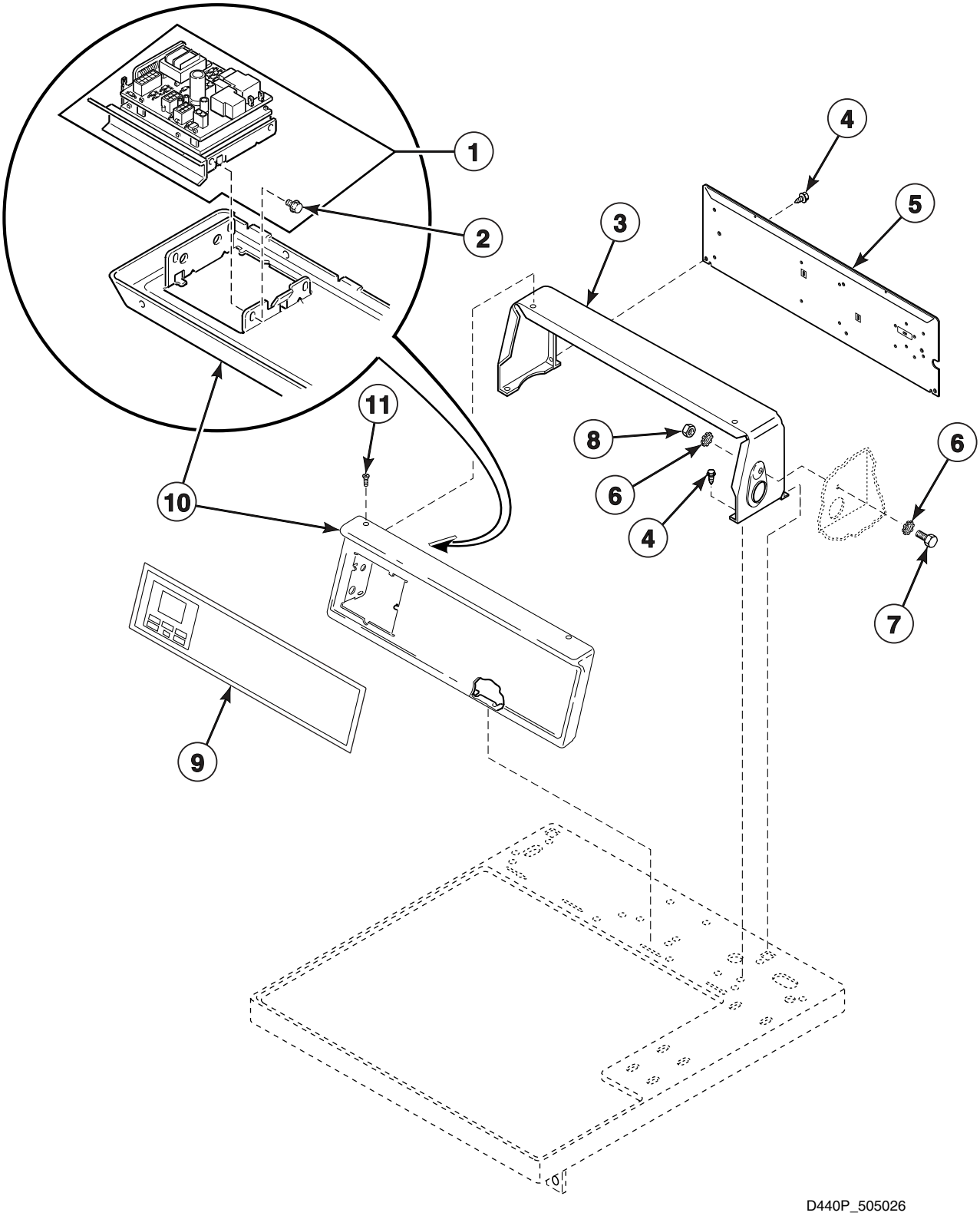

© Copyright, Alliance Laundry Systems LLC – DO NOT COPY or TRANSMIT

Control Panel, Control Hood and Controls - Electronic Control Models

REF	PART NO.	DESCRIPTION	COMMENTS
1	M411883P	Control Kit	230 Volt; Includes item 2; Models SDE407*A3000, SDE407*A4350, SDG409*A3000 and SDG409*A3058
	M414050P	Control Kit	120 Volt; Includes item 2; All other models
2	501524	Screw	
3	502567W	Control Hood	White
	502567L	Control Hood	Almond
4	501086	Screw	
5	505798	Hood Back Plate	
6	02431	Washer	
7	02916	Screw	
8	52566	Nut	
9	504113	Graphic Overlay	Models SDE407*A3000, SDE407*A4350, SDG409*A3000 and SDG409*A3058
	N/A	Graphic Overlay	All other models
10	501359W	Control Panel	White
	501359L	Control Panel	Almond
11	500226	Screw	

*** Add Letter To Designate Color. L - Almond W - White**

N/A = Part no longer available

© Copyright, Alliance Laundry Systems LLC – DO NOT COPY or TRANSMIT

Cabinet Top

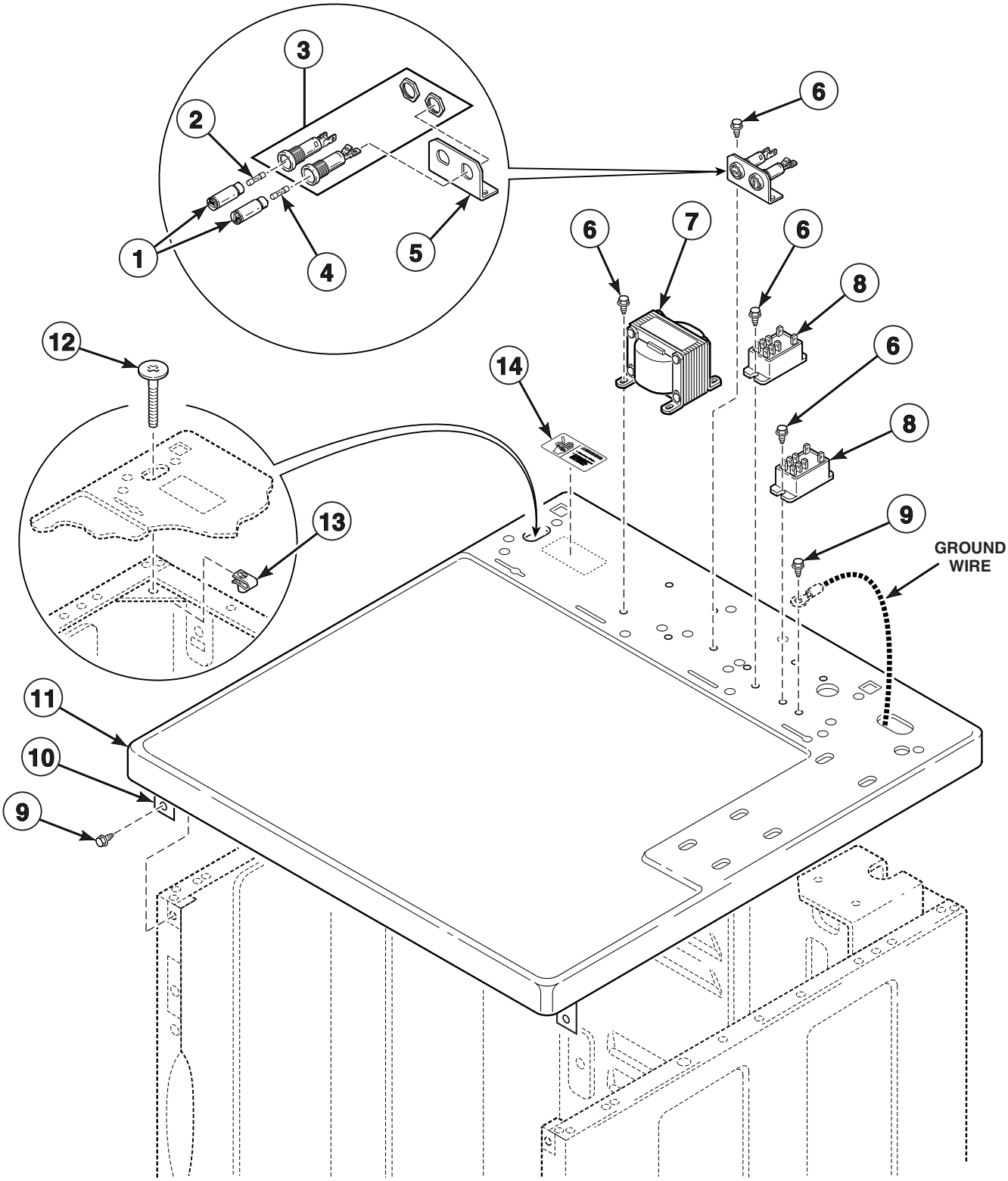

D339P_505026

© Copyright, Alliance Laundry Systems LLC – DO NOT COPY or TRANSMIT

Cabinet Top

REF	PART NO.	DESCRIPTION	COMMENTS
1	502811	Fuse Carrier	Models HDG009*B3008, HDG109*B3013 and SDG109*B3013
2	502593	Fuse	Primary; 400 mA; Models HDG009*B3008, HDG109*B3013 and SDG109*B3013
3	502591	Fuse Holder Body	Models HDG009*B3008, HDG109*B3013 and SDG109*B3013
4	502592	Fuse	Secondary; 3.15 Amp; Models HDG009*B3008, HDG109*B3013 and SDG109*B3013
5	502589	Fuse Holder Bracket	Models HDG009*B3008, HDG109*B3013 and SDG109*B3013
6	501086	Screw	Models HDG009*B3008, HDG109*B3013 and SDG109*B3013
7	M412477	Transformer	Models HDG009*B3008, HDG109*B3013 and SDG109*B3013
	511658P	Transformer Kit	Models HDG009*C3000, HDG109*C3000, SDG009*A3000 and SDG109*A5412
8	502501	Relay	Models HDG009*B3008, HDG109*B3013 and SDG109*B3013
9	503688	Screw	
10	510146	Bracket	
11	502570W	Top Panel	White; Models HDG009*B3008, HDG109*B3013 and SDG109*B3013
	502570L	Top Panel	Almond; Models HDG009*B3008, HDG109*B3013 and SDG109*B3013
	511527WP	Top Kit	White; Includes item 10; All other metered models
	511527LP	Top Kit	Almond; Includes item 10; All other metered models
	511528WP	Top Kit	White; Includes item 10; All other nonmetered models
	511528LP	Top Kit	Almond; Includes item 10; All other nonmetered models
12	503673	Screw	Optional for added security
13	27222	Nut	Metered models
14	500316	Warning Label	Models with 1102, 1502 and 1702 suffixes
	505281	Disconnect Power Warning Label	Models HDE007*A3000, HDE007*C3000, HDE107*A3000, HDE107*C3000, HDG009*A3000, HDG009*A3008, HDG009*B3008, HDG009*C3000, HDG109*A3000, HDG109*C3000, SDE007*A3000, SDE007*A4350, SDE107*A1724, SDE107*A3000, SDE107*A4350, SDE107*A5412, SDE407*A3000, SDE407*A4350, SDG009*A3000, SDG009*A3058, SDG109*A1124, SDG109*A3000, SDG109*A3058, SDG109*A5412, SDG409*A3000 and SDG409*A3058
	502511	Electrical Shock Label	Models HDE007*B3003, HDE007*B3008, HDE007*B3010, HDE107*B3018, HDG109*B3013, SDE007*B3018, SDE107*B3018 and SDG109*B3013

*** Add Letter To Designate Color. L - Almond W - White**

© Copyright, Alliance Laundry Systems LLC – DO NOT COPY or TRANSMIT

Loading Door

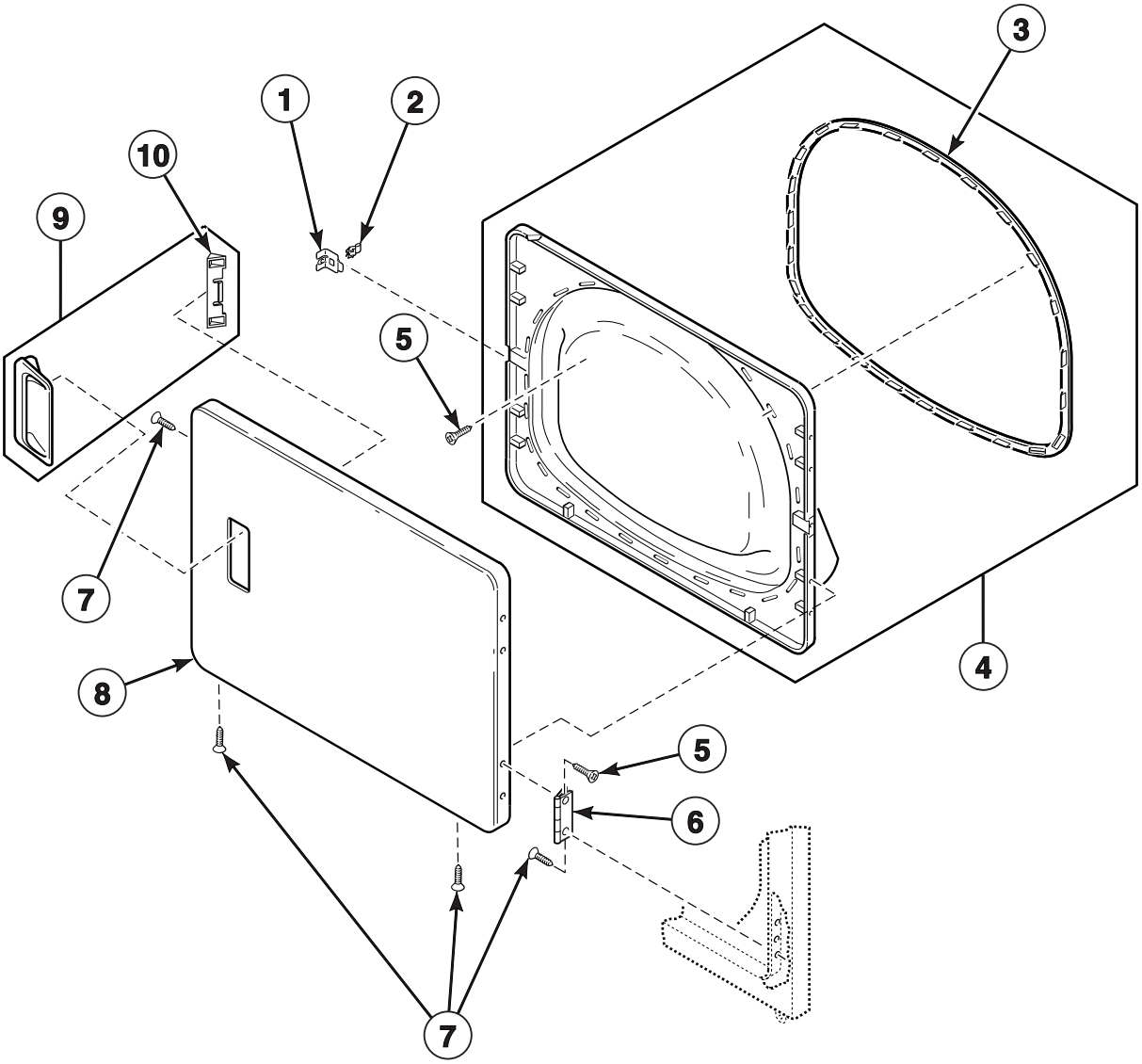

DRY1737P_505026

© Copyright, Alliance Laundry Systems LLC – DO NOT COPY or TRANSMIT

Loading Door

REF	PART NO.	DESCRIPTION	COMMENTS
1	510127	Door Strike Mount	
2	510181	Door Strike	
3	510147	Liner Door Seal	
4	510163WP	Liner, Seal and Grill Assembly	Includes item 3
5	505295	Screw	
6	511036	Door Hinge	
7	500226	Screw	
8	510013W	Dryer Door	White
	510013L	Dryer Door	Almond
9	510103W	Door Pull	White; Includes item 10
	510103L	Door Pull	Almond; Includes item 10
10	510129	Door Handle Wedge	

© Copyright, Alliance Laundry Systems LLC – DO NOT COPY or TRANSMIT

Lower Access Panel, Front Panel and Seal

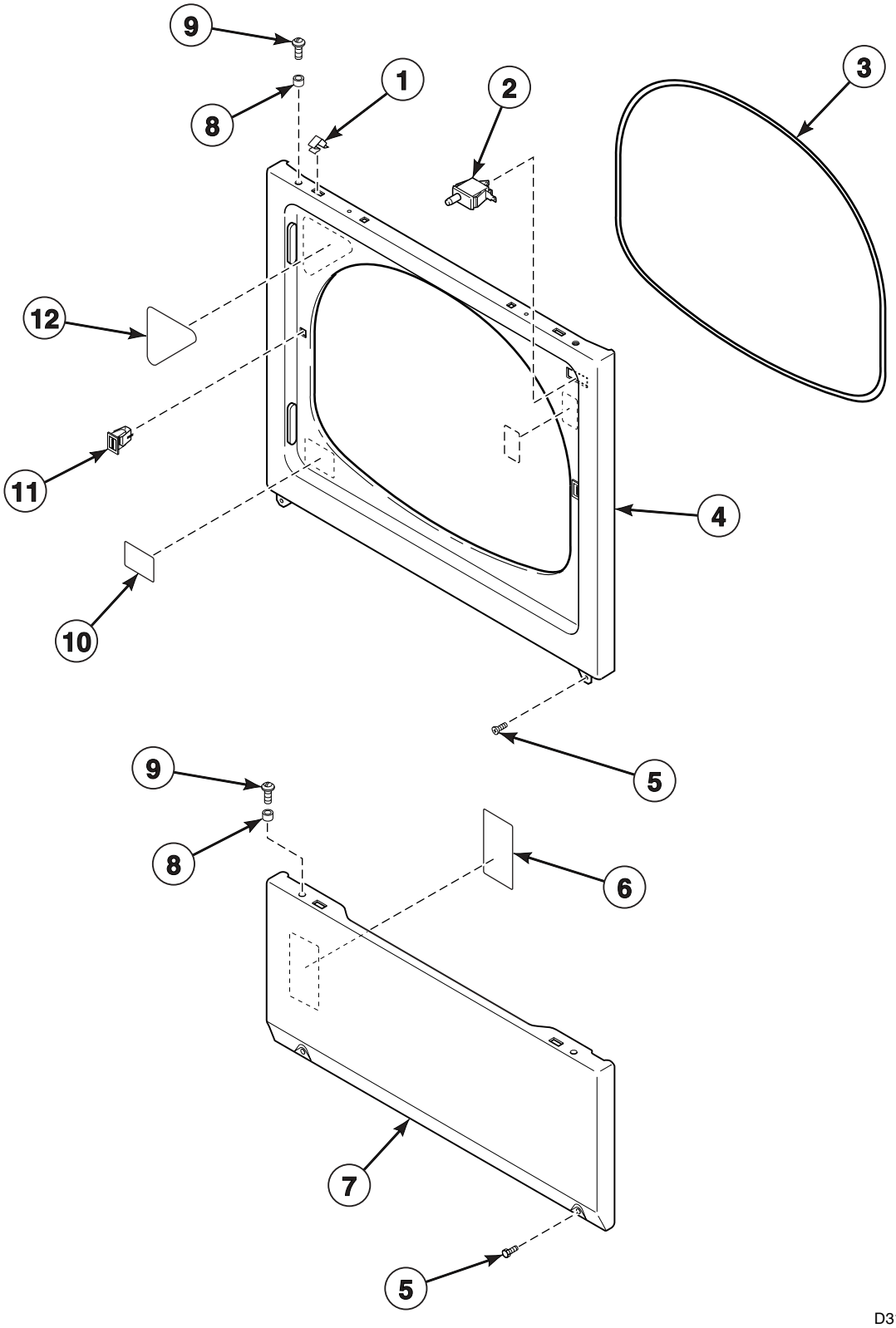

D313P_505026

© Copyright, Alliance Laundry Systems LLC – DO NOT COPY or TRANSMIT

Lower Access Panel, Front Panel and Seal

REF	PART NO.	DESCRIPTION	COMMENTS
	282P4	Torx Bit	Use with 62853 Screw
	24161	Bit Holder	Use with 62853 Screw
1	28835	Speed Clip	
2	504570	Switch	
3	511056	Front Panel Seal	
4	510066W	Front Panel	White
	510066L	Front Panel	Almond
5	503688	Screw	
	62853	Screw	Optional for added security
6	511004	Gas Clearance Label	Gas models
7	510069W	Access Panel	White
	510069L	Access Panel	Almond
8	56079	Panel Locator	
9	39733	Screw	
10	502804	Clean Lint Label	Models HDE007*A1702, HDE007*A3000, HDE007*C1702, HDE007*C3000, HDE107*A1502, HDE107*A1702, HDE107*A3000, HDE107*C1502, HDE107*C1702, HDE107*C3000, HDE507*A1502, HDE507*A1702, HDE507*C1502, HDE507*C1702, HDE607*A1502, HDE607*A1702, HDE607*C1502, HDE607*C1702, HDE707*A1502, HDE707*A1702, HDE707*C1502, HDE707*C1702, HDG009*A1102, HDG009*A3000, HDG009*C1102, HDG009*C3000, HDG109*A1102, HDG109*A3000, HDG109*C1102, HDG109*C3000, HDG509*A1102, HDG509*C1102, HDG609*A1102, HDG709*A1102, HDG709*C1102, SDE007*A3000, SDE107*A1724, SDE107*A3000, SDE107*A5412, SDE407*A3000, SDG009*A3000, SDG109*A1124, SDG109*A3000, SDG109*A5412 and SDG409*A3000
11	510177	Door Catch Assembly	
12	500281	Warning/Caution Label	Models HDE007*A3000, HDE007*B3003, HDE007*B3008, HDE007*B3010, HDE007*C3000, HDE107*A3000, HDE107*B3018, HDE107*C3000, HDG009*A3000, HDG009*A3008, HDG009*B3008, HDG009*C3000, HDG109*A3000, HDG109*B3013, SDE007*A3000, SDE007*A4350, SDE007*B3018, SDE107*A1724, SDE107*A3000, SDE107*A4350, SDE107*A5412, SDE107*B3018, SDE407*A3000, SDE407*A4350, SDG009*A3000, SDG009*A3058, SDG109*A1124, SDG109*A3000, SDG109*A3058, SDG109*A5412, SDG109*B3013, SDG409*A3000 and SDG409*A3058
	500253	Caution Label	Models with 1102, 1502 and 1702 suffixes

*** Add Letter To Designate Color. L - Almond W - White**

© Copyright, Alliance Laundry Systems LLC – DO NOT COPY or TRANSMIT

Motor, Exhaust Fan and Belt

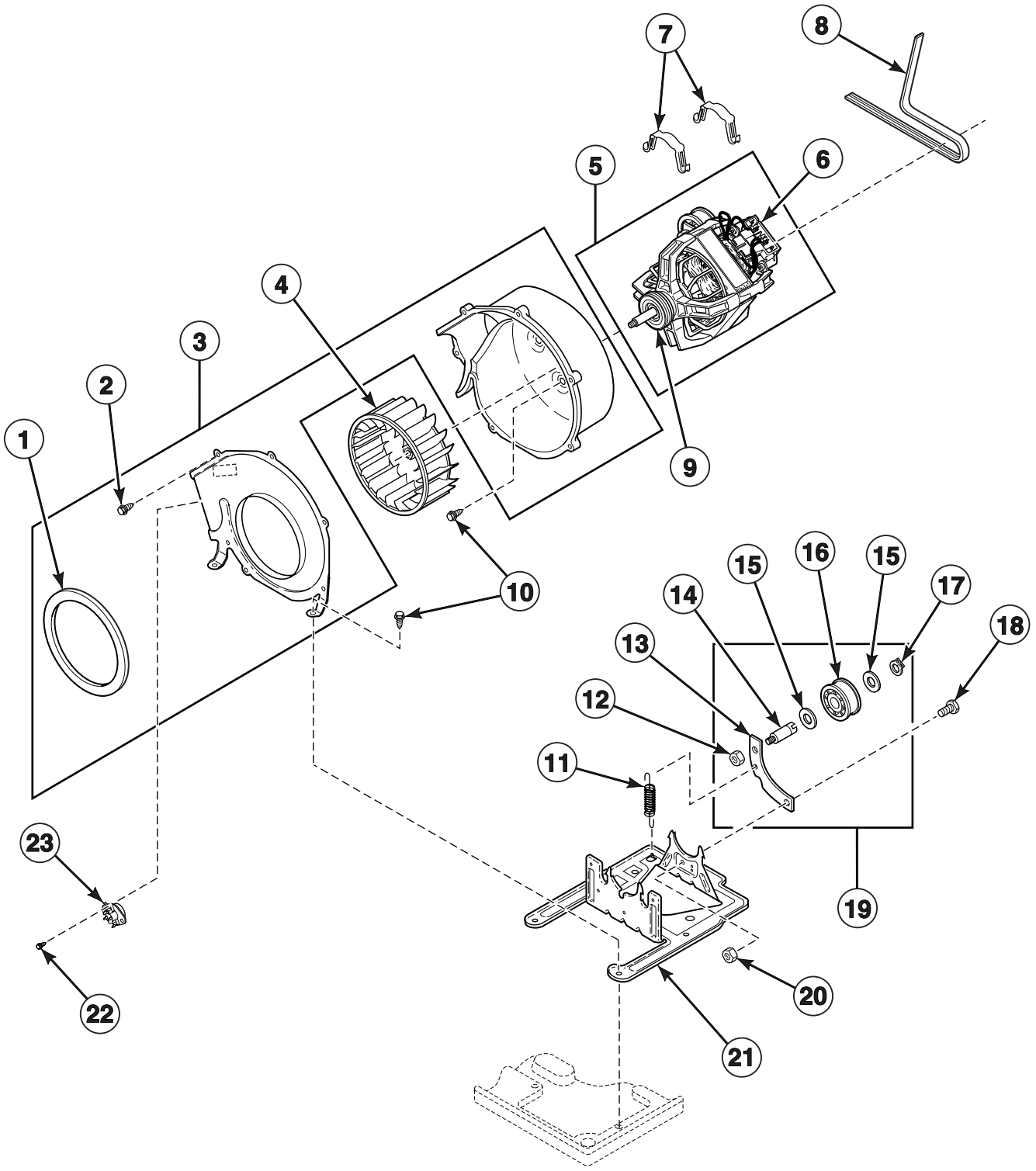

© Copyright, Alliance Laundry Systems LLC – DO NOT COPY or TRANSMIT

Motor, Exhaust Fan and Belt

REF	PART NO.	DESCRIPTION	COMMENTS
	510717P	Blower and Fan Kit	Includes items 1-7 and 9-21
	512196	Motor Pulley	60 Hertz; Used with 511629P and 505869P Motor and Pulley Assembly
	500222	Motor Pulley	50 Hertz; Used with 505843P Motor and Pulley Assembly
1	510238	Blower Housing Seal	
2	31260	Screw	
3	511969P	Blower Housing and Cover Kit	Includes items 1 and 2
4	510139	Blower Fan Assembly	
5	511629P	Motor and Pulley Assembly	120 Volt/60 Hertz; Includes items 6 and 9; Models with 1102, 1502 and 1702 suffixes
	505869P	Motor and Pulley Assembly	240 Volt/60 Hertz; Includes items 6 and 9; Models SDE107*A5412 and SDG109*A5412
	505843P	Motor and Pulley Assembly	240 Volt/50 Hertz; Includes items 6 and 9; All other models
6	501218P	Motor Switch Kit	Does not include thermal protector
7	510180	Motor Mount Clamp	
8	511255	Cylinder Belt	
9	590P3	Motor Hub Ring Kit	One per side
10	503688	Screw	
11	510185	Idler Spring	
12	56156	Nut	
13	510133	Idler Lever	
14	56461	Shaft	
15	52549	Washer	
16	510142	Idler Wheel and Bearing Assembly	
17	23748	Retaining Ring	
18	500824	Screw	
19	510158	Idler Lever and Wheel Assembly	Includes items 12-17
20	52566	Nut	
21	510060	Motor Mount	
22	33561	Screw	
23	504515	Thermostat	Green; Models HDE007*A1702, HDE007*C1702, HDE107*A1502, HDE107*A1702, HDE107*C1502, HDE107*C1702, HDG009*A1102, HDG009*C1102, HDG109*A1102, HDG109*C1102, SDE107*A1724 and SDG109*A1124
	504517	Thermostat	Red; Models HDG009*B3008, HDG109*B3013 and SDG109*B3013
	511887	Thermostat	Tan/White; All other electromechanical models
	M414704	Thermistor	Models SDE407*A3000, SDE407*A4350, SDG409*A3000 and SDG409*A3058
	510523	Thermistor Assembly	Black; All other electronic control models

*** Add Letter To Designate Color. L - Almond W - White**

© Copyright, Alliance Laundry Systems LLC – DO NOT COPY or TRANSMIT

Front Bulkhead, Air Duct, Felt Seal and Cylinder

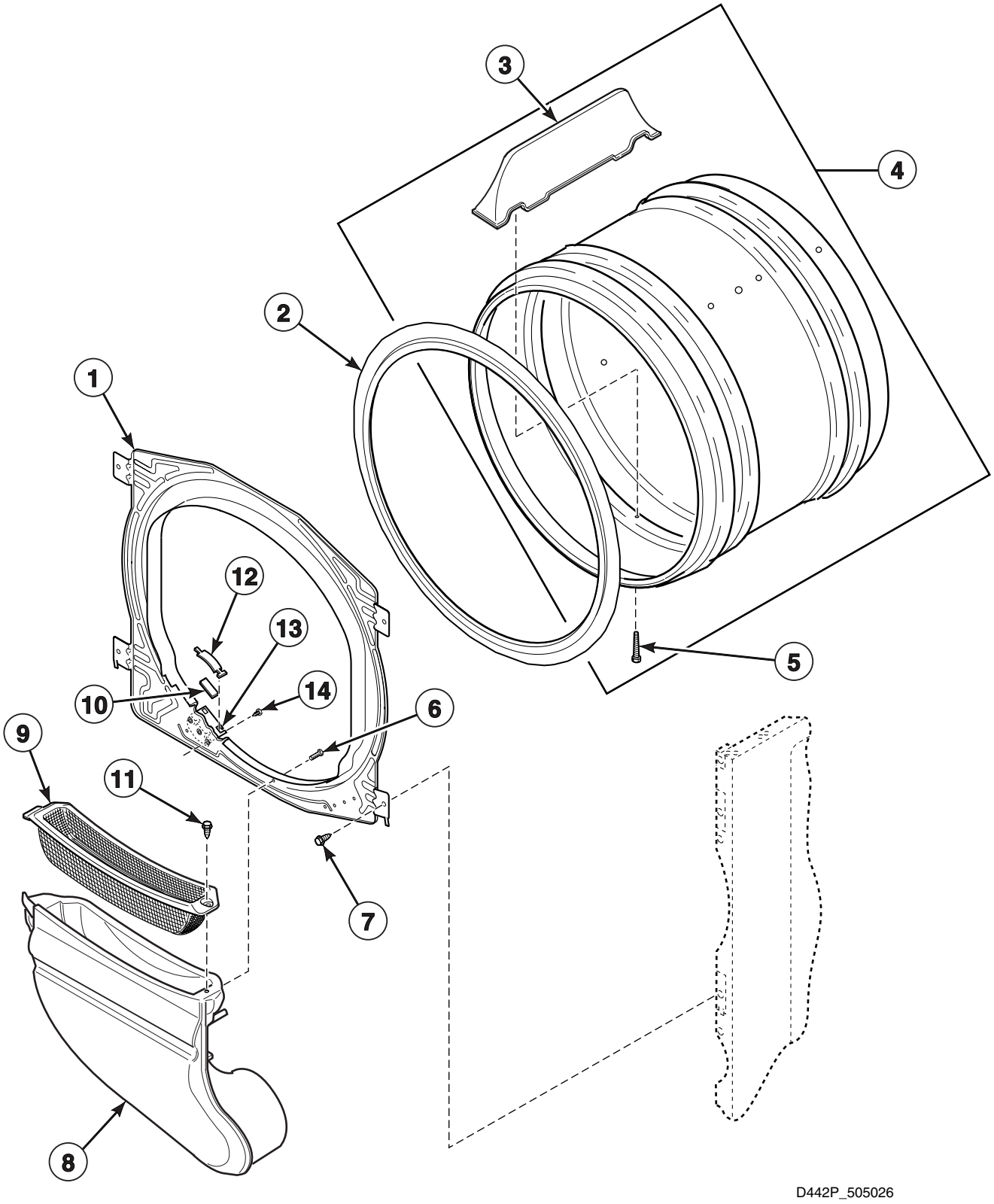

© Copyright, Alliance Laundry Systems LLC – DO NOT COPY or TRANSMIT

Front Bulkhead, Air Duct, Felt Seal and Cylinder

REF	PART NO.	DESCRIPTION	COMMENTS
	511637	Adhesive	For cylinder seal
	510502	Lint Filter Cover	Optional on coin models
1	510266	Front Bulkhead Assembly	Includes items 2, 10, 12 and 13
2	510207P	Cylinder Seal Assembly	
3	503703	Cylinder Baffle	
4	510265	Cylinder Assembly	Includes items 3 and 5
5	62588	Screw	
6	505295	Screw	
7	503688	Screw	
8	510151	Air Duct Assembly	
9	503980	Lint Filter	
10	500121	Felt Pad	
11	501285	Screw	
12	510187	Cylinder Glide	2 per side
13	510145	Cylinder Glide Bracket	
14	501086	Screw	

© Copyright, Alliance Laundry Systems LLC – DO NOT COPY or TRANSMIT

Rear Bulkhead, Felt Seal, Cylinder Roller and Terminal Block

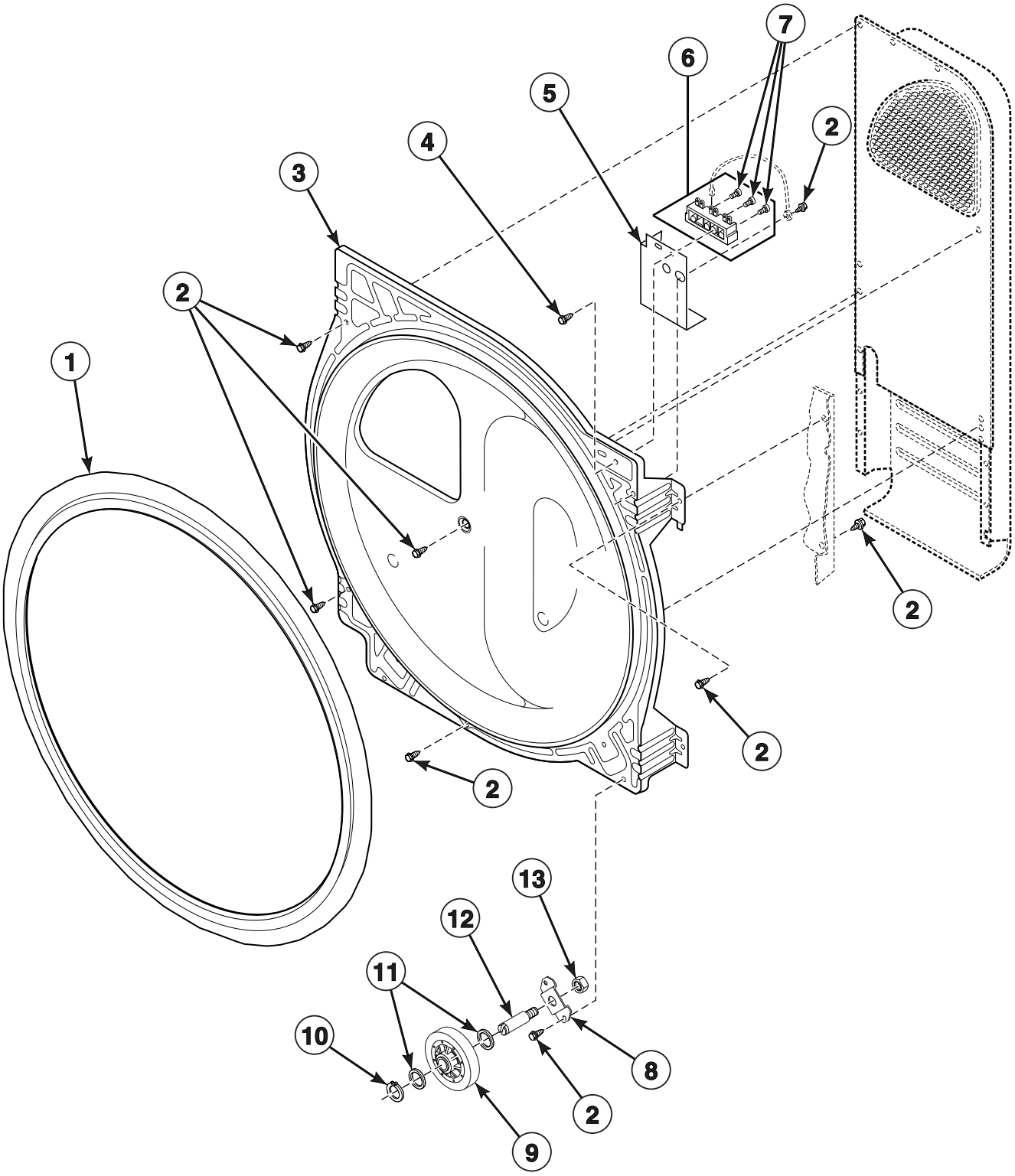

© Copyright, Alliance Laundry Systems LLC – DO NOT COPY or TRANSMIT

Rear Bulkhead, Felt Seal, Cylinder Roller and Terminal Block

REF	PART NO.	DESCRIPTION	COMMENTS
	511637	Adhesive	For cylinder seal
1	510207	Cylinder Seal Assembly	
2	503688	Screw	
3	511082	Rear Bulkhead Assembly	Includes item 1
4	501285	Screw	
5	505768	Terminal Block Shield	Models HDE007*B3003, HDE007*B3008, HDE007*B3010, HDE107*B3018, HDG009*A3008, HDG009*B3008, HDG109*B3013, SDE007*B3018, SDE107*B3018 and SDG109*B3013
	510237	Terminal Block Shield	All other electric models
6	510190P	Terminal Block Assembly	Includes 3 of item 7; All models except HDG009*A1102, HDG009*A3008, HDG009*B3008, HDG009*C1102, HDG109*A1102, HDG109*B3013, HDG109*C1102, HDG509*A1102, HDG509*C1102, HDG609*A1102, HDG709*A1102, HDG709*C1102, SDG109*A1124 and SDG109*B3013
	502517	Terminal Block	Models HDG009*A3008, HDG009*B3008, HDG109*B3013 and SDG109*B3013
7	61199	Screw	
8	510100	Cylinder Roller Bracket	
9	510708P	Cylinder Roller	
10	23748	Retaining Ring	
11	52549	Washer	
12	56461	Shaft	
13	56156	Nut	

*** Add Letter To Designate Color. L - Almond W - White**

© Copyright, Alliance Laundry Systems LLC – DO NOT COPY or TRANSMIT

Heater Duct and Element Assembly

Electric Models

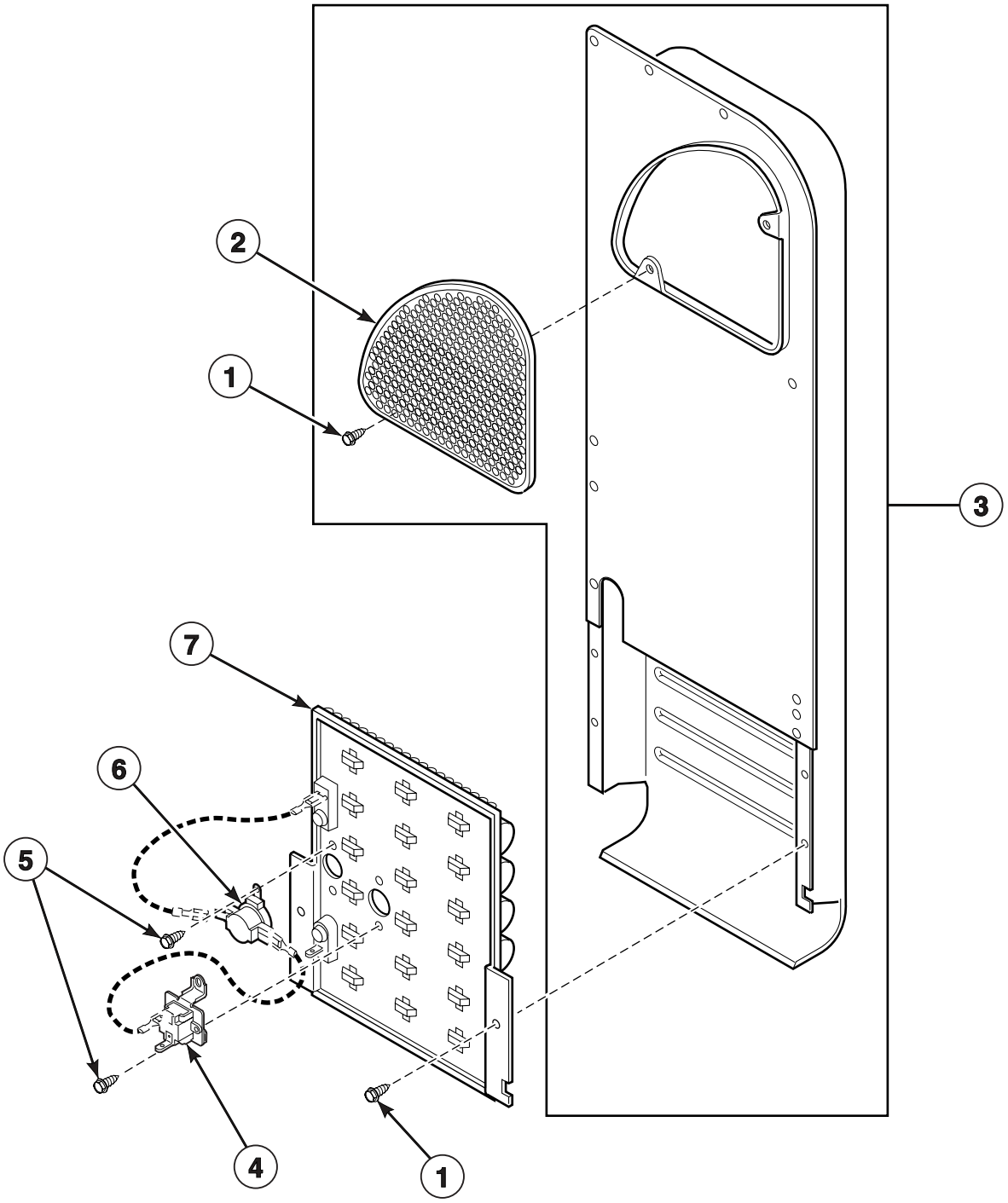

D292P_505026

© Copyright, Alliance Laundry Systems LLC – DO NOT COPY or TRANSMIT

Heater Duct and Element Assembly

REF	PART NO.	DESCRIPTION	COMMENTS
1	503688	Screw	
2	500820	Outlet Cover	
3	510025P	Heater Duct and Screw Assembly	Includes items 1 and 2
4	511412	Thermal Fuse Assembly	
5	23222	Screw	
6	510701	Limit Thermostat	
7	510324	Heater Assembly	5 kW; 240 Volt/60 Hertz; Models HDE007*A1702, HDE007*C1702, HDE107*A1702, HDE107*C1702, HDE507*A1702, HDE507*C1702, HDE607*A1702, HDE607*C1702, HDE707*A1702, HDE707*C1702 and SDE107*A5412
	510330	Heater Assembly	4.25 kW; 208 Volt/60 Hertz; Models HDE107*A1502, HDE107*C1502, HDE507*A1502, HDE507*C1502, HDE607*A1502, HDE607*C1502, HDE707*A1502 and HDE707*C1502
	510326	Heater Assembly	4.8 kW; 240 Volt/60 Hertz; Models HDE007*A3000, HDE007*B3003, HDE007*B3008, HDE007*B3010, HDE007*C3000, HDE107*A3000, HDE107*B3018, HDE107*C3000, SDE007*A3000, SDE007*B3018, SDE107*A1724, SDE107*A3000, SDE107*B3018 and SDE407*A3000
	510327	Heater Assembly	4 kW; 240 Volt/50 Hertz; Models SDE007*A4350, SDE107*A4350 and SDE407*A4350

*** Add Letter To Designate Color. L - Almond W - White**

© Copyright, Alliance Laundry Systems LLC – DO NOT COPY or TRANSMIT

Heater Duct Assembly

Models HDG009*A1102, HDG009*A3000, HDG009*A3008, HDG009*B3008, HDG009*C1102, HDG009*C3000, HDG109*A1102, HDG109*A3000, HDG109*B3013, HDG109*C1102, HDG109*C3000, HDG509*A1102, HDG509*C1102, HDG609*A1102, HDG709*A1102, HDG709*C1102, SDG009*A3000, SDG109*A1124, SDG109*A3000, SDG109*A5412, SDG109*B3013 and SDG409*A3000

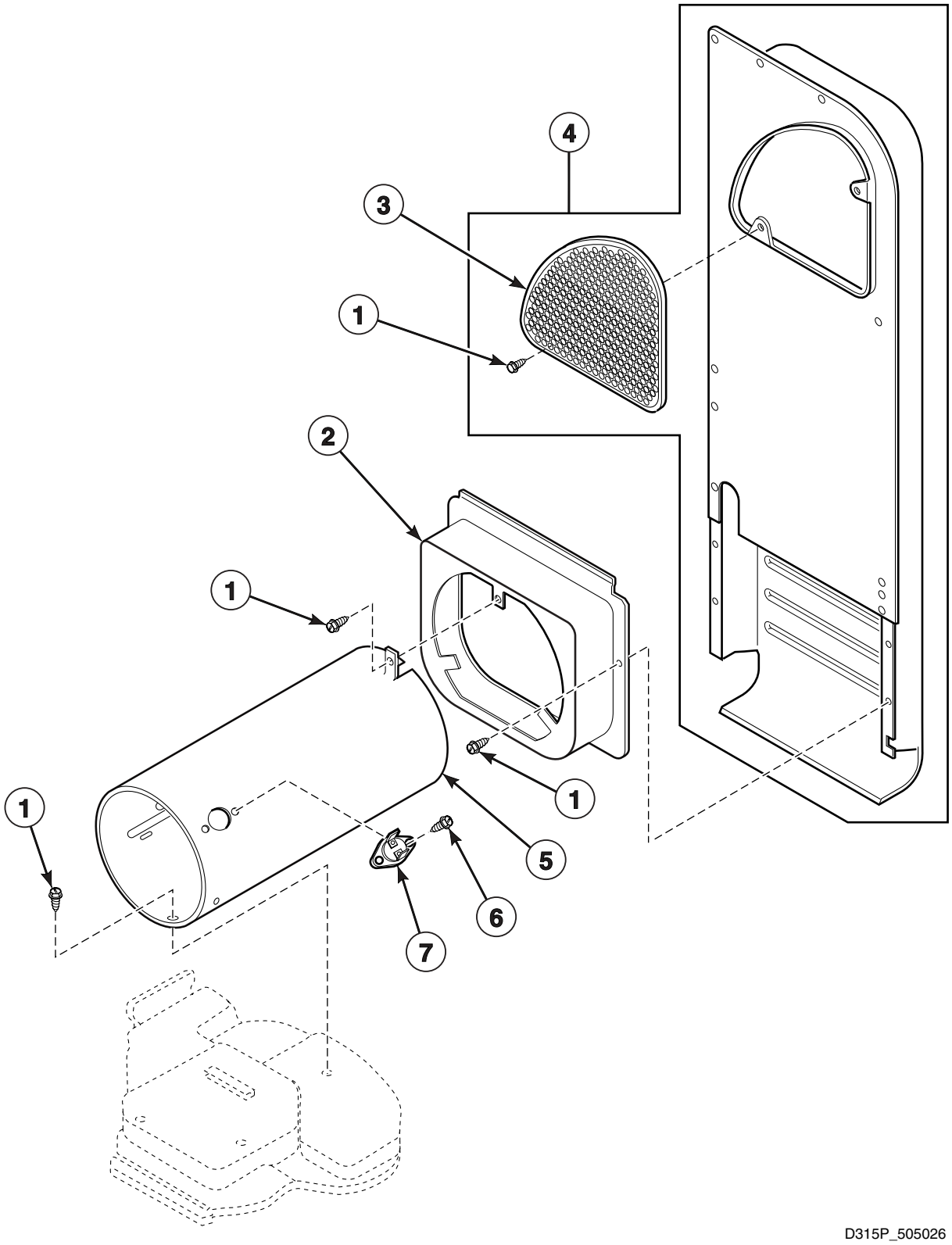

© Copyright, Alliance Laundry Systems LLC – DO NOT COPY or TRANSMIT

Heater Duct Assembly

REF	PART NO.	DESCRIPTION	COMMENTS
1	503688	Screw	
2	510101	Heat Duct Shroud	
3	500820	Outlet Cover	
4	510025P	Heater Duct and Screw Assembly	Includes items 1 and 3
5	510131	Combustion Duct	
6	51782	Screw	
7	510702	Limit Thermostat	Auto reset

*** Add Letter To Designate Color. L - Almond W - White**

© Copyright, Alliance Laundry Systems LLC – DO NOT COPY or TRANSMIT

Heater Duct Assembly - Australian Gas Models

Models SDG009*A3058, SDG109*A3058 and SDG409*A3058

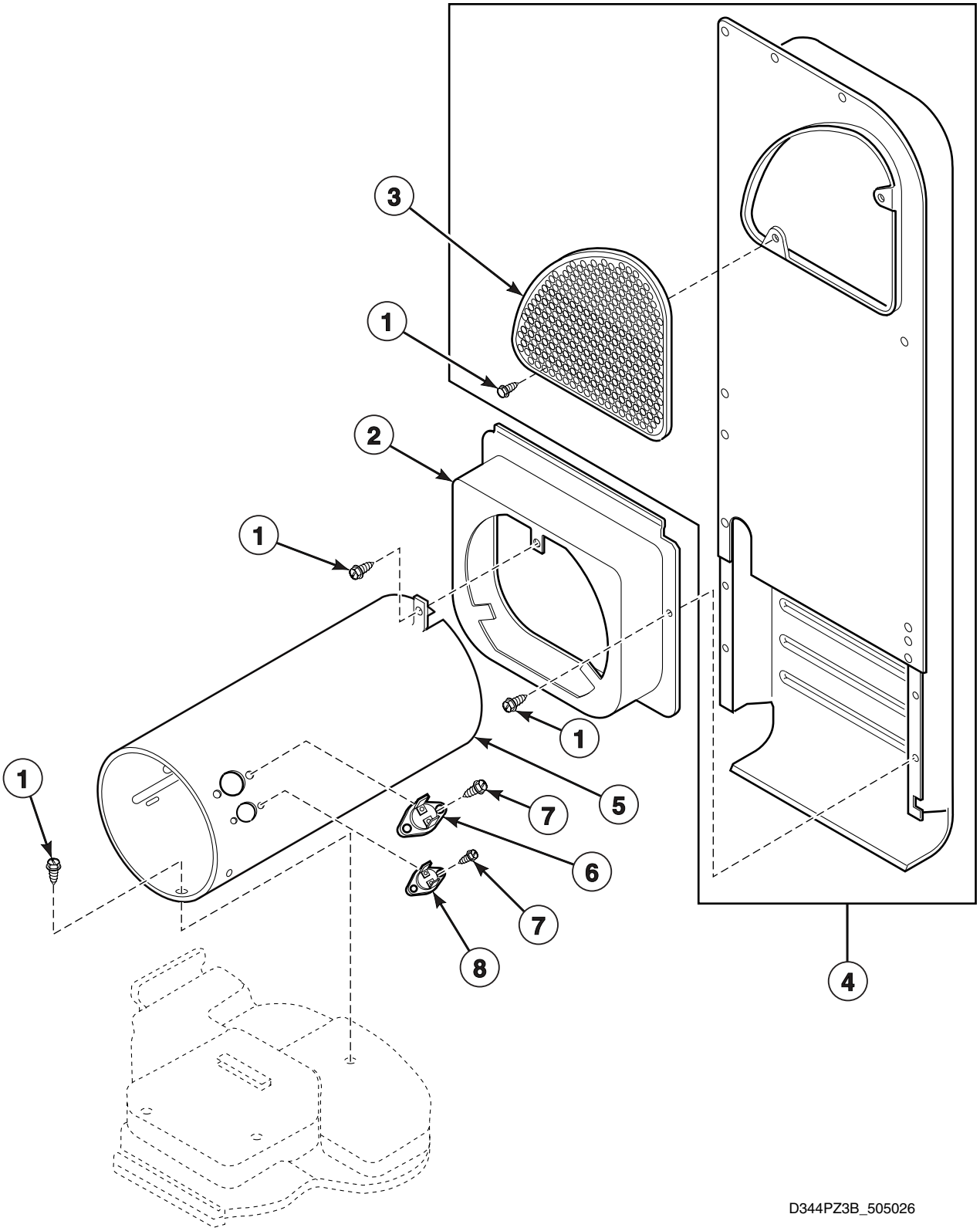

© Copyright, Alliance Laundry Systems LLC – DO NOT COPY or TRANSMIT

Heater Duct Assembly - Australian Gas Models

REF	PART NO.	DESCRIPTION	COMMENTS
1	503688	Screw	
2	510101	Heat Duct Shroud	
3	500820	Outlet Cover	
4	510025P	Heater Duct and Screw Assembly	Includes items 1 and 3
5	510132	Combustion Duct	
6	510702	Limit Thermostat	Auto reset
7	51782	Screw	
8	510703	Thermostat	Manual reset

*** Add Letter To Designate Color. L - Almond W - White**

© Copyright, Alliance Laundry Systems LLC – DO NOT COPY or TRANSMIT

Gas Valve, Igniter and Gas Conversion Kits

Models HDG009*A1102, HDG009*A3000, HDG009*A3008, HDG009*C1102, HDG009*C3000, HDG109*A1102, HDG109*A3000, HDG109*C1102, HDG109*C3000, HDG509*A1102, HDG509*C1102, HDG609*A1102, HDG709*A1102, HDG709*C1102, SDG009*A3000, SDG109*A1124, SDG109*A3000, SDG109*A5412 and SDG409*A3000

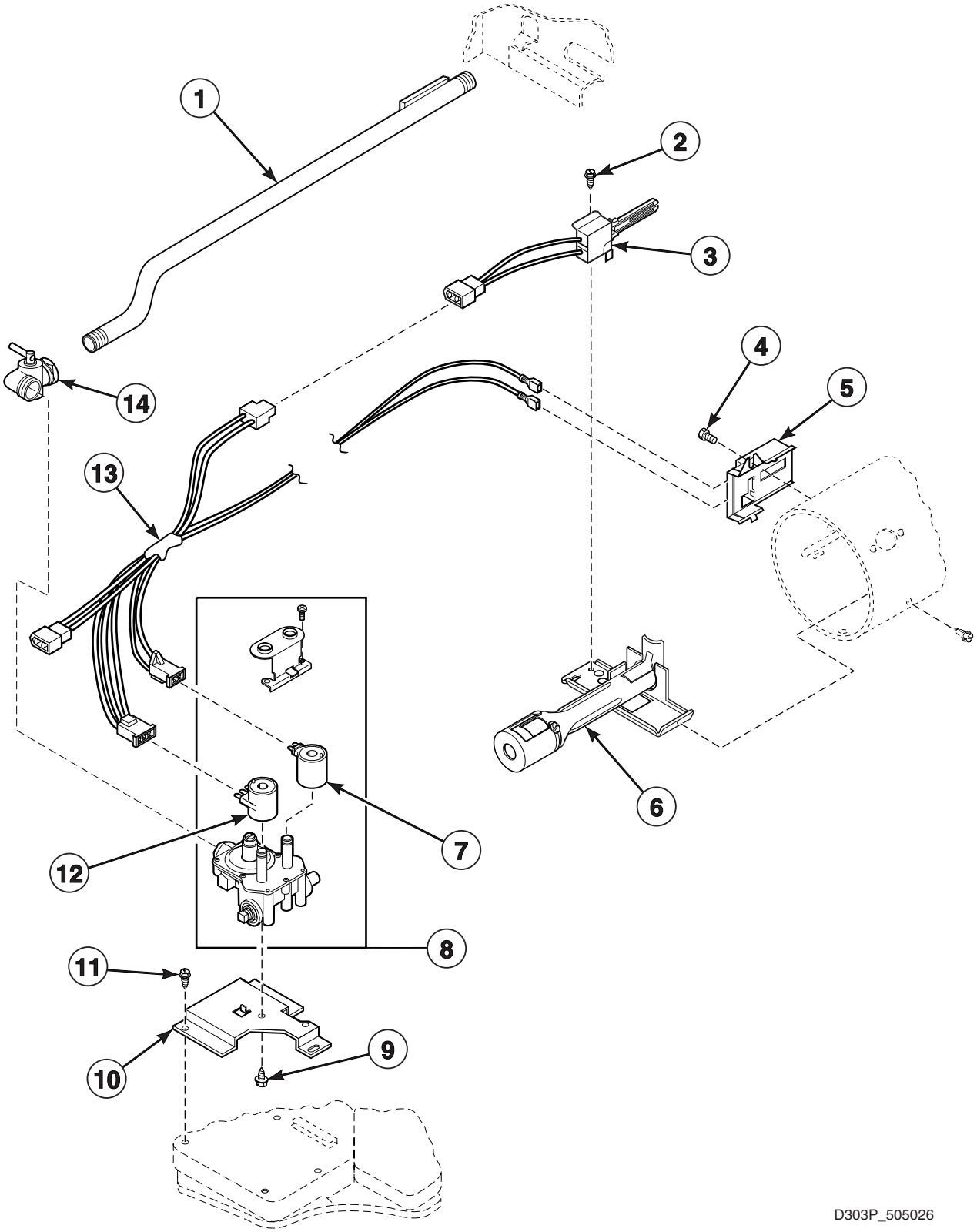

© Copyright, Alliance Laundry Systems LLC – DO NOT COPY or TRANSMIT

Gas Valve, Igniter and Gas Conversion Kits

REF	PART NO.	DESCRIPTION	COMMENTS
	401P3	L.P. Conversion Kit	Used to convert dryers from Natural Gas (N.G.) or Mixed Gas to Liquid Petroleum Gas (L.P.); 20,000 Btu
	402P3	N.G. Conversion Kit	Used to convert dryers from L.P. to N.G. or Mixed Gas; 20,000 Btu
	458P3	L.P. Conversion Kit	Used to convert dryers from N.G. or Mixed Gas to L.P.; 25,000 Btu
	459P3	N.G. Conversion Kit	Used to convert dryers from L.P to N.G. or Mixed Gas; 25,000 Btu
1	510204	Lead-In Pipe Assembly	
2	51782	Screw	
3	510184P	Igniter and Bracket Assembly	
4	23222	Screw	
5	510213	Sensor	
6	510149	Burner Assembly	
7	58804B	Secondary Coil	60 Hertz; Model SDG109*A5412
	59063B	Secondary Coil	50 Hertz
8	60353	Gas Valve Assembly	Includes items 7 and 12; 25000 Btu; 60 Hertz; Models HDG009*A1102, HDG009*C1102, HDG109*A1102, HDG109*C1102, HDG509*A1102, HDG509*C1102, HDG609*A1102, HDG709*A1102 and HDG709*C1102
	60443	Valve Assembly	Includes items 7 and 12; 25000 Btu; 50 Hertz; Models HDG009*A3000, HDG009*A3008, HDG009*C3000, HDG109*A3000, HDG109*C3000, SDG009*A3000, SDG109*A1124, SDG109*A3000 and SDG409*A3000
	58804	Gas Valve Assembly	Includes items 7 and 12; 20000 Btu; 60 Hertz; Model SDG109*A5412
9	56124	Screw	
10	510128	Gas Valve Mounting Bracket	
11	503688	Screw	
12	58804A	Booster and Holding Coil	60 Hertz; Model SDG109*A5412
	59063A	Booster and Holding Coil	50 Hertz
13	510530	Gas Valve Wire Harness Assembly	
14	510205	Elbow Shut-Off Valve	

*** Add Letter To Designate Color. L - Almond W - White**

© Copyright, Alliance Laundry Systems LLC – DO NOT COPY or TRANSMIT

Gas Valve, Igniter and Gas Conversion Kits - Australian and CE Gas Models

Models HDG009*B3008, HDG109*B3013, SDG009*A3058, SDG109*A3058, SDG109*B3013 and SDG409*A3058

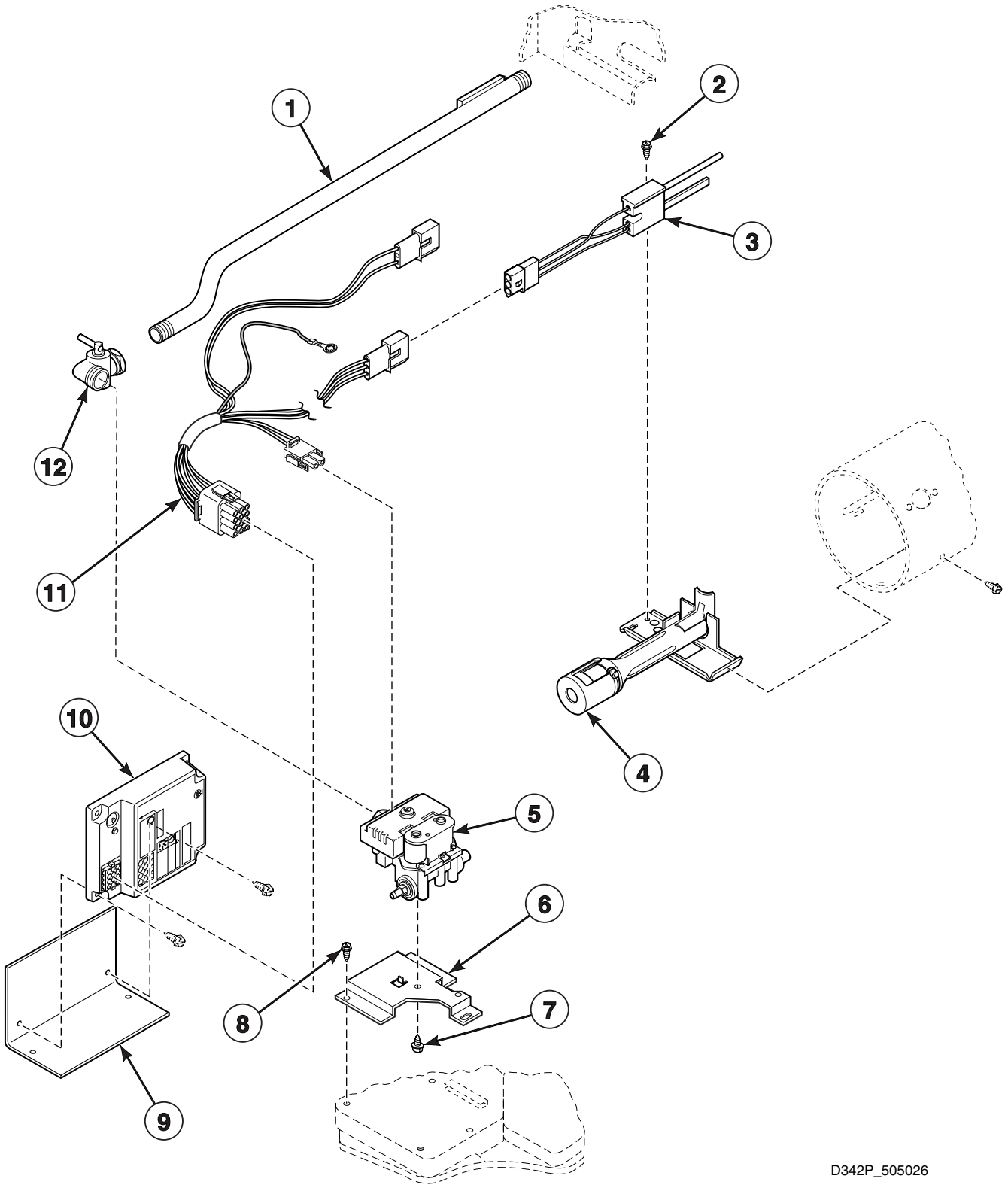

© Copyright, Alliance Laundry Systems LLC – DO NOT COPY or TRANSMIT

Gas Valve, Igniter and Gas Conversion Kits - Australian and CE Gas Models

REF	PART NO.	DESCRIPTION	COMMENTS
	458P3	L.P. Conversion Kit	Used to convert dryers from Natural (N.G.) or Mixed Gas to Liquid Petroleum Gas (L.P.); Models SDG009*A3058, SDG109*A3058 and SDG409*A3058
	459P3	N.G. Conversion Kit	Used to convert dryers from L.P. to N.G. or Mixed Gas; Models SDG009*A3058, SDG109*A3058 and SDG409*A3058
	600P3	L.P. Conversion Kit	Used to convert dryers from N.G. or Mixed Gas to L.P. ; Models HDG009*B3008, HDG109*B3013 and SDG109*B3013
1	510204	Lead-In Pipe Assembly	
2	51782	Screw	
3	502995	Igniter and Sensor Assembly	
4	510149	Burner Assembly	
5	502478	Gas Valve Assembly	
6	510128	Gas Valve Mounting Bracket	
7	56124	Screw	
8	503688	Screw	
9	502425	Ignition Control Bracket	
10	502994	Igniter Control	
11	502609	Gas Valve Wire Harness Assembly	
12	510205	Elbow Shut-Off Valve	

*** Add Letter To Designate Color. L - Almond W - White**

© Copyright, Alliance Laundry Systems LLC – DO NOT COPY or TRANSMIT

Cabinet, Exhaust Duct and Base

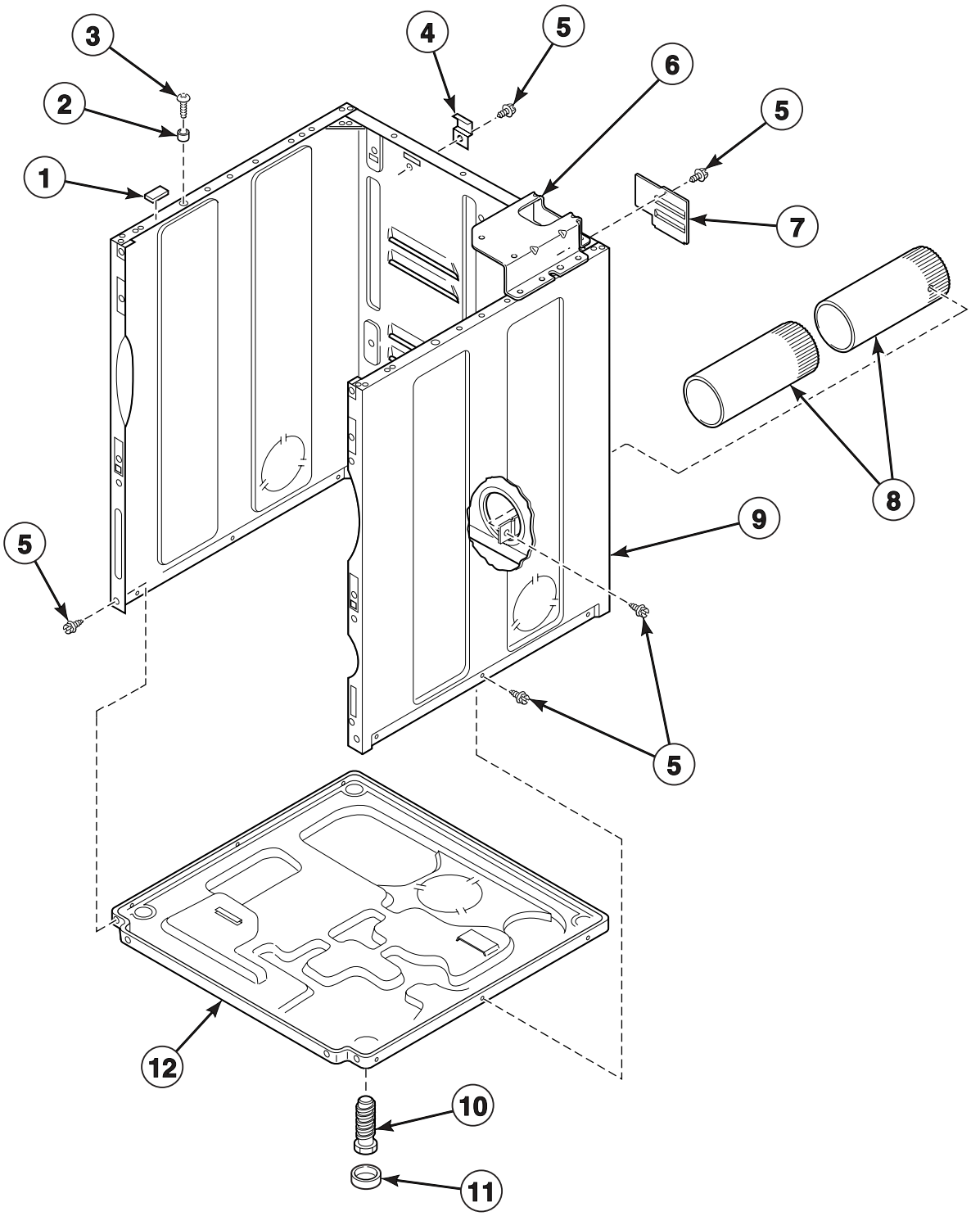

D337PZ3C_505026

© Copyright, Alliance Laundry Systems LLC – DO NOT COPY or TRANSMIT

Cabinet, Exhaust Duct and Base

REF	PART NO.	DESCRIPTION	COMMENTS
	521P3	Flexible Venting Kit	
	528P3	Directional Exhaust Kit	Used to vent dryer out the sides or bottom
1	56128	Bumper Pad	
2	56079	Panel Locator	
3	39733	Screw	
4	510136	Top Hinge	
5	503688	Screw	
6	503456	Meter Case Mounting Bracket Assembly	Metered models
7	510903	Access Panel Plate	
8	510137	Exhaust Duct	Each dryer requires 2 pieces
9	727P3W	Panel Kit	White
	727P3L	Panel Kit	Almond
10	510135	Leveling Leg	
11	501855	Rubber Foot	
12	510084	Dryer Base	

© Copyright, Alliance Laundry Systems LLC – DO NOT COPY or TRANSMIT

Label Location on Rear of Cabinet

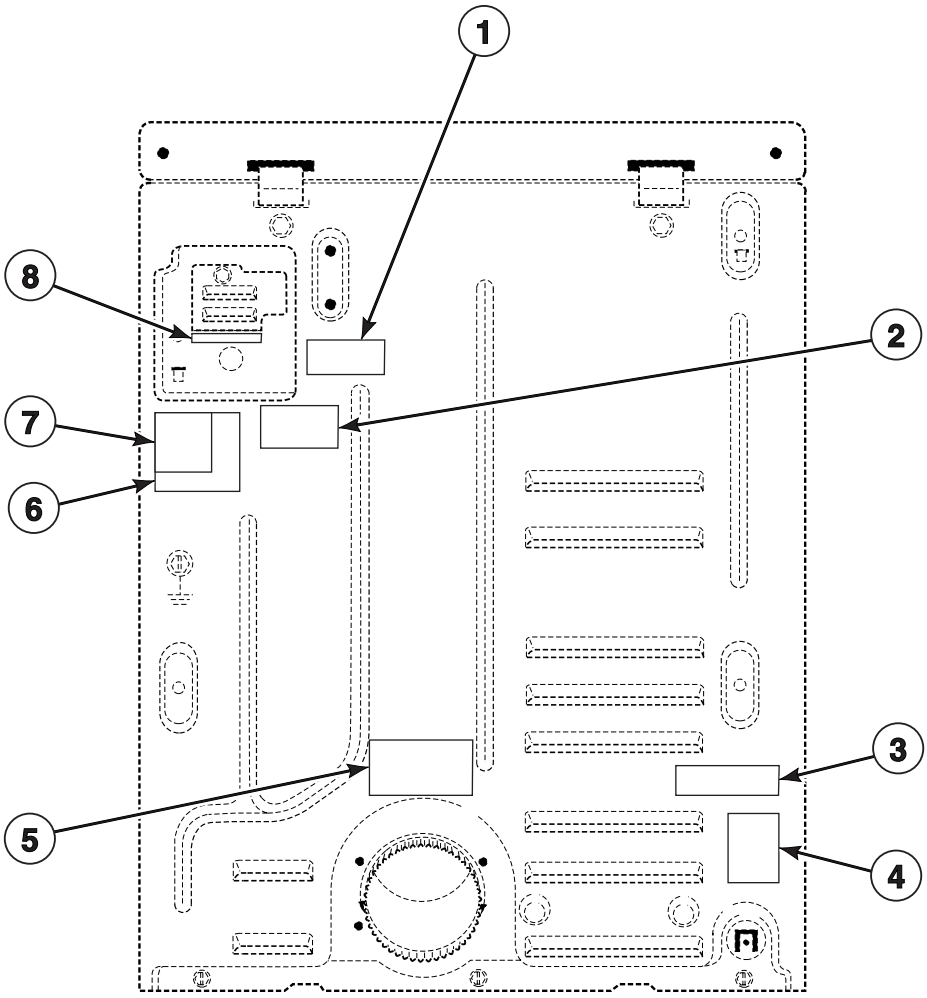

D338PZ3A_505026

© Copyright, Alliance Laundry Systems LLC – DO NOT COPY or TRANSMIT

Label Location on Rear of Cabinet

REF	PART NO.	DESCRIPTION	COMMENTS
1	500316	Warning Label	Disconnect Power; Models HDE007*A1702, HDE007*C1702, HDE107*A1502, HDE107*A1702, HDE107*C1502, HDE107*C1702, HDE507*A1502, HDE507*A1702, HDE507*C1502, HDE507*C1702, HDE607*A1502, HDE607*A1702, HDE607*C1502, HDE607*C1702, HDE707*A1502, HDE707*A1702, HDE707*C1502, HDE707*C1702, HDG009*A1102, HDG009*C1102, HDG109*A1102, HDG109*C1102, HDG509*A1102, HDG509*C1102, HDG609*A1102, HDG709*A1102 and HDG709*C1102
2	62104	Voltage Warning Label	Models HDE107*A1502, HDE107*C1502, HDE507*A1502, HDE507*C1502, HDE607*A1502, HDE607*C1502, HDE707*A1502 and HDE707*C1502
3	501140	Natural Gas Notice Label	Models SDG009*A3058, SDG109*A3058 and SDG409*A3058
4	511004	Gas Clearance Label	Models HDG009*A1102, HDG009*A3000, HDG009*A3008, HDG009*C1102, HDG009*C3000, HDG109*A1102, HDG109*A3000, HDG109*C1102, HDG109*C3000, HDG509*A1102, HDG509*C1102, HDG609*A1102, HDG709*A1102, HDG709*C1102, SDG009*A3000, SDG009*A3058, SDG109*A1124, SDG109*A3000, SDG109*A3058, SDG109*A5412, SDG409*A3000 and SDG409*A3058
5	500497	Exhaust Warning Label	All models except HDE007*B3003, HDE007*B3008, HDE007*B3010, HDE107*B3018, HDG009*B3008, HDG109*B3013, SDE007*B3018, SDE107*B3018 and SDG109*B3013
6	511005	Electric Clearance Label	Models HDE507*A1502, HDE507*A1702, HDE507*C1502 and HDE507*C1702
7	500493	30 Amp Notice Label	Models HDE007*A1702, HDE007*A3000, HDE007*C1702, HDE007*C3000, HDE107*A1502, HDE107*A1702, HDE107*A3000, HDE107*C1502, HDE107*C1702, HDE107*C3000, HDE507*A1502, HDE507*A1702, HDE507*C1502, HDE507*C1702, HDE607*A1502, HDE607*A1702, HDE607*C1502, HDE607*C1702, HDE707*A1502, HDE707*A1702, HDE707*C1502, HDE707*C1702, SDE007*A3000, SDE107*A1724, SDE107*A3000, SDE107*A5412 and SDE407*A3000
	500495	15 Amp Notice Label	Models HDG009*A1102, HDG009*A3000, HDG009*A3008, HDG009*C1102, HDG009*C3000, HDG109*A1102, HDG109*A3000, HDG109*C1102, HDG109*C3000, HDG509*A1102, HDG509*C1102, HDG609*A1102, HDG709*A1102, HDG709*C1102, SDG009*A3000, SDG109*A1124, SDG109*A3000, SDG109*A5412 and SDG409*A3000
	500496	20 Amp Notice Label	Models SDE007*A4350, SDE107*A4350 and SDE407*A4350
8	501288	Terminal Block Label	Models SDE007*A4350, SDE107*A4350, SDE407*A4350, SDG009*A3058 and SDG109*A3058

*** Add Letter To Designate Color. L - Almond W - White**

© Copyright, Alliance Laundry Systems LLC – DO NOT COPY or TRANSMIT

Terminal Block and Terminals

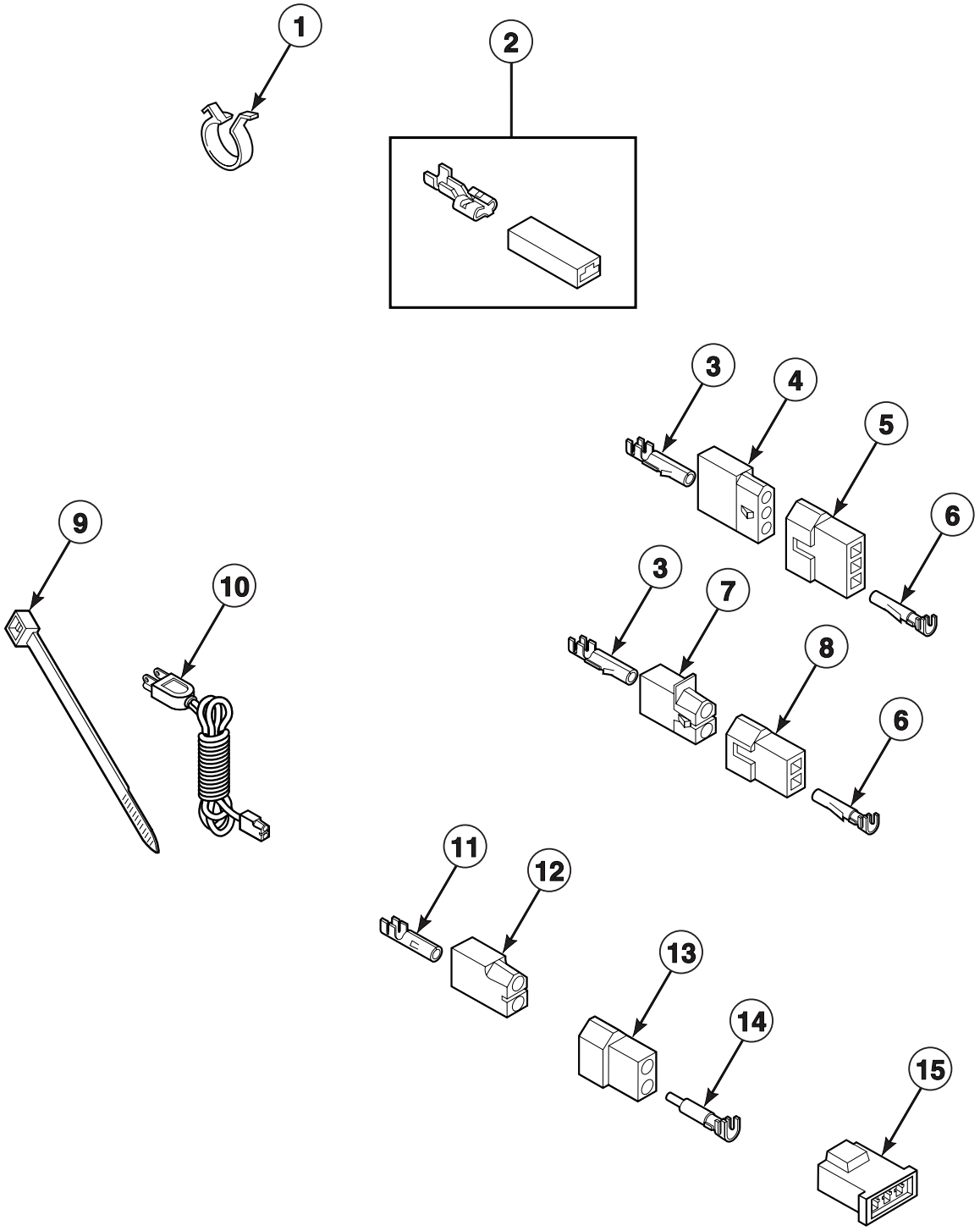

D321P_505026

© Copyright, Alliance Laundry Systems LLC – DO NOT COPY or TRANSMIT

Terminal Block and Terminals

REF	PART NO.	DESCRIPTION	COMMENTS
1	504034	Wire Clip	
2	00360	Ultra Pod Terminal	(1) 12 gauge wire or (2) 18 gauge wires
3	00117	Female Pin Terminal	
4	23039	3 Circuit Receptacle	
5	23040	Plug	3 circuit
6	00116	Male Pin Terminal	
7	56451	2 Circuit Receptacle	
8	56448	2 Circuit Plug	
9	55881	Harness Strap	
10	59308	Lead-In Cord	Models HDG009*A1102, HDG009*C1102, HDG109*A1102, HDG109*C1102, HDG509*A1102, HDG509*C1102, HDG609*A1102, HDG709*A1102 and HDG709*C1102
	510505	Lead-In Cord Assembly	Models HDE007*A1702, HDE007*C1702, HDE107*A1502, HDE107*A1702, HDE107*C1502, HDE107*C1702, HDE507*A1502, HDE507*A1702, HDE507*C1502, HDE507*C1702, HDE607*A1502, HDE607*A1702, HDE607*C1502, HDE607*C1702, HDE707*A1502, HDE707*A1702, HDE707*C1502 and HDE707*C1702
	502786	Power Cord Assembly	Models HDG009*B3008, HDG109*B3013 and SDG109*B3013
	61605	Lead-In Cord	Models SDE007*A4350, SDE107*A4350 and SDE407*A4350
	N/A	Lead-In Cord	Models SDG009*A3058, SDG109*A3058 and SDG409*A3058
	503597	Lead-In Cord Assembly	Models HDE007*B3003, HDE007*B3008, HDE007*B3010, HDE107*B3018, SDE007*B3018 and SDE107*B3018
11	00130	Female Pin Terminal	
12	56265	2 Circuit Receptacle	
13	56266	2 Circuit Plug	
14	00127	Male Pin Terminal	
15	58800	3 Circuit Connector	

*** Add Letter To Designate Color. L - Almond W - White**

N/A = Part no longer available

© Copyright, Alliance Laundry Systems LLC – DO NOT COPY or TRANSMIT

Terminals

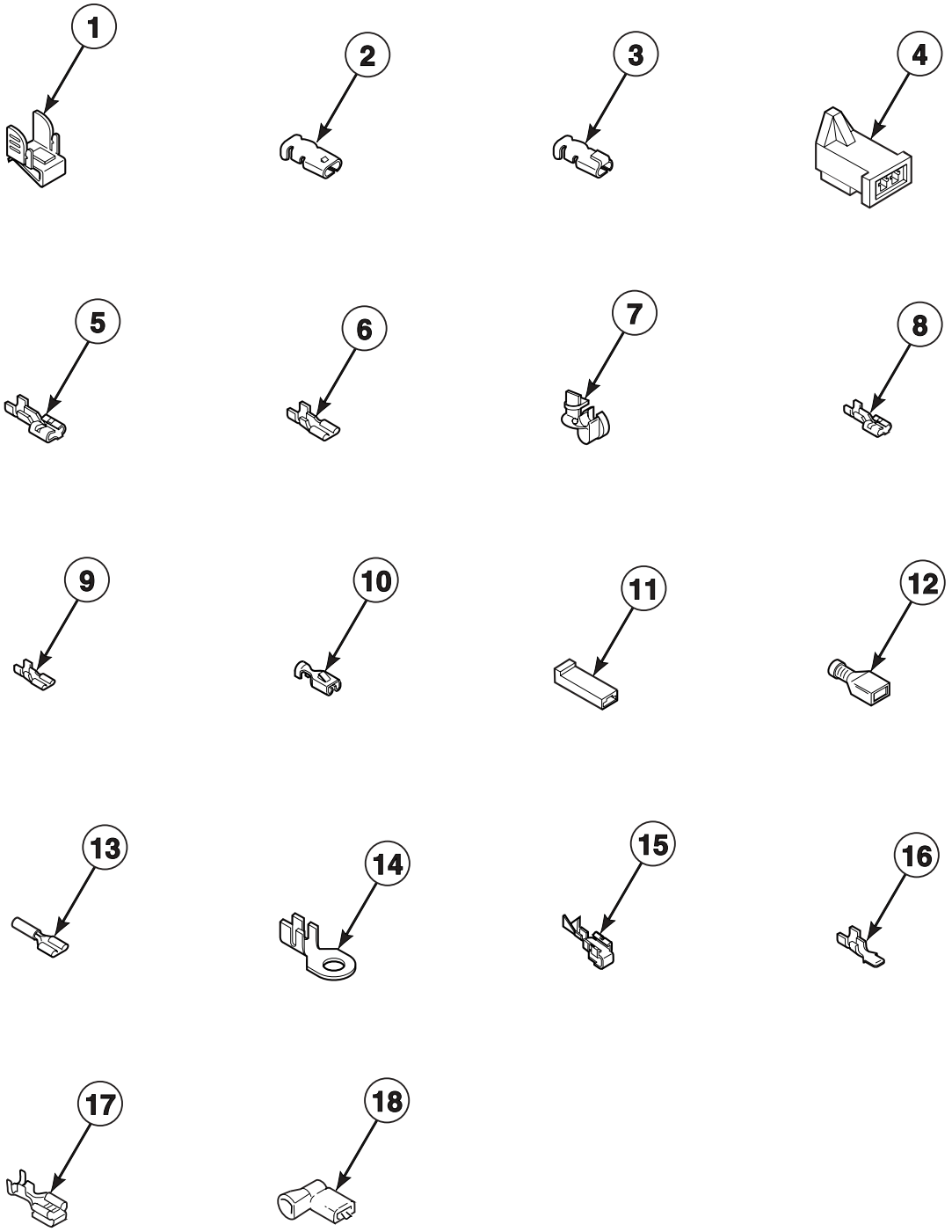

D322P_505026

© Copyright, Alliance Laundry Systems LLC – DO NOT COPY or TRANSMIT

Terminals

REF	PART NO.	DESCRIPTION	COMMENTS
	502496	Strain Relief Adapter	Models HDE007*B3003, HDE007*B3008, HDE007*B3010, HDE107*B3018, HDG009*B3008, HDG109*B3013, SDE007*B3018, SDE107*B3018 and SDG109*B3013
1	00161	Grounding Clip	
2	00189	Female Spade Terminal	
3	00361	Female Piggyback Terminal	
4	58799	2 Circuit Connector	
5	00223	Female Spade Terminal	1/4 inch; (1) 18 gauge wire
	00121	Female Spade Terminal	1/4 inch; (2) 18 gauge wires or (1) 12 gauge wire
	00245	Spade Terminal	1/4 inch; (1) 22 gauge wire
6	00124	Female Spade Terminal	3/16 inch; (1) 18 gauge wire; .020 tab
	00156	Female Spade Terminal	3/16 inch; Thermostat wire; .032 tab
	00209	Female Spade Terminal	3/16 inch; (2) 18 gauge wires; .020 tab
7	38384	Strain Relief	Models HDG009*A1102, HDG009*C1102, HDG109*A1102, HDG109*C1102, HDG509*A1102, HDG509*C1102, HDG609*A1102, HDG709*A1102 and HDG709*C1102
	502500	Strain Relief	Models HDG009*B3008, HDG109*B3013 and SDG109*B3013
	52113	Strain Relief	Models HDE007*B3003, HDE007*B3008, HDE007*B3010, HDE107*B3018, SDE007*A4350, SDE007*B3018, SDE107*A4350, SDE107*B3018 and SDE407*A4350
8	00346	Terminal	
9	00347	Terminal	
10	00115	Female Spade Terminal	1/4 inch; (1) 18 gauge wire
	00321	Female Spade Terminal	1/4 inch; (2) 18 gauge wires or (1) 12 gauge wire
11	90789	Receptacle Housing	
12	00359	Ultra Pod Terminal	1/4 inch
	00165	Insulated Female Terminal	3/16 inch
13	N/A	Pre-Insulated Spade Terminal	1/4 inch; (1) 18 gauge wire
	00215	Pre-Insulated Spade Terminal	1/4 inch; (1) 12 gauge wire
14	00110	Ring Terminal	No. 10; (1) 18 gauge wire
	00111	Ring Terminal	No. 10; (2) 18 gauge wires or (1) 12 gauge wire
15	00114	Female Spade Terminal	1/4 inch; Double connector
16	00139	Male Tab Terminal	1/4 inch; (2) 18 gauge wires or (1) 12 gauge wire
17	00344	Female Tab Terminal	
18	00345	Flag Insulated Terminal	

*** Add Letter To Designate Color. L - Almond W - White**

N/A = Part no longer available

© Copyright, Alliance Laundry Systems LLC – DO NOT COPY or TRANSMIT

Motor Connection Block and Tools

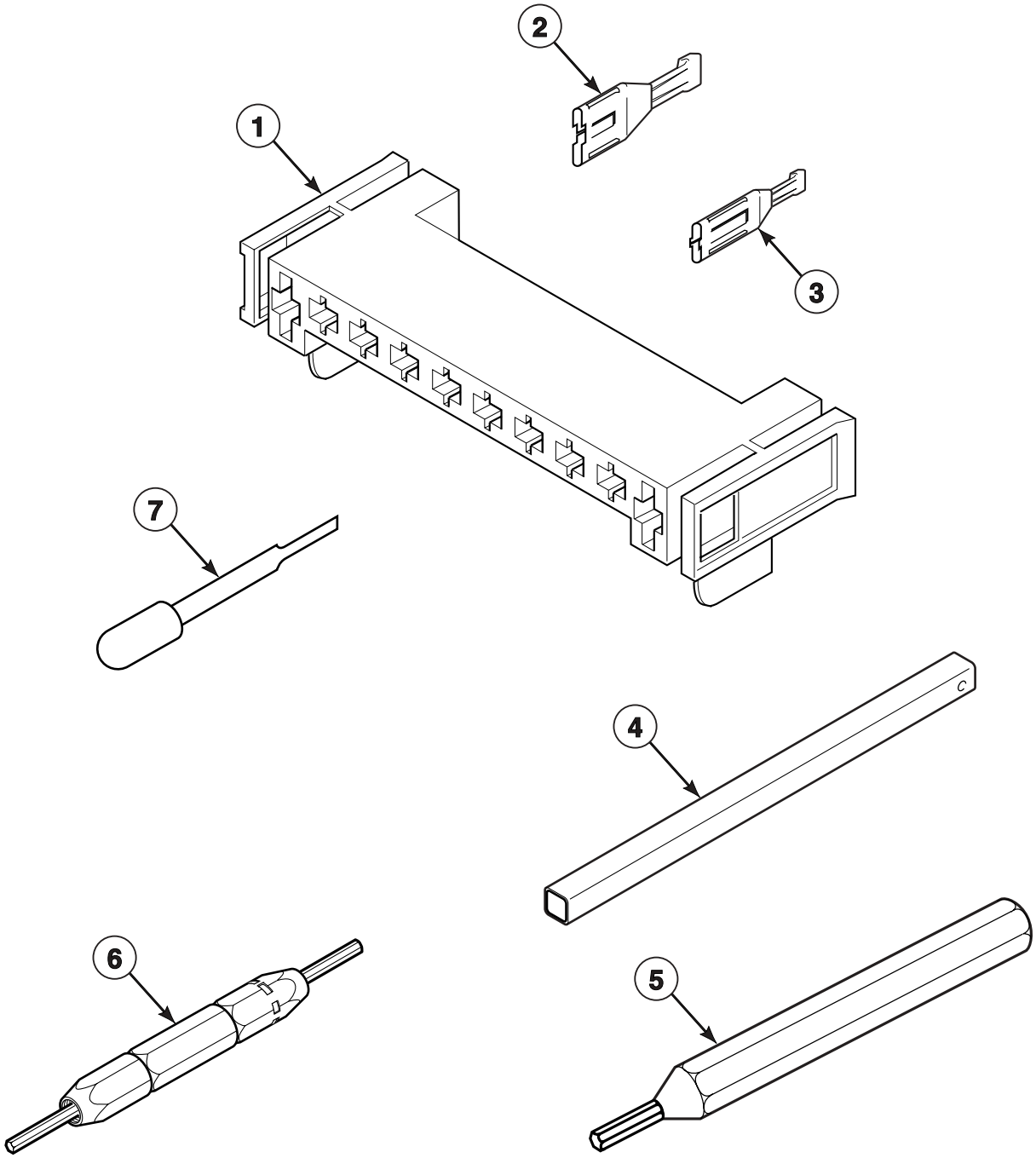

D319P_505026

© Copyright, Alliance Laundry Systems LLC – DO NOT COPY or TRANSMIT

Motor Connection Block and Tools

REF	PART NO.	DESCRIPTION	COMMENTS
1	500338	10 Position Housing	
2	00255	Female Terminal	1/4 inch; (1) 12 gauge wire
	00256	Female Terminal	1/4 inch; (1) or (2) 18 gauge wires
3	00188	Female Terminal	For 1 or 2 wire application
4	310P4	Ratchet Extension Tool	1/4 inch; For coin drop installation
5	128P4	Extractor Tool	For use on gas dryer terminals
6	190P4	Extractor Tool	For use on electric dryer terminals
7	283P4	Terminal Extractor Tool	For use on Molex connectors

© Copyright, Alliance Laundry Systems LLC – DO NOT COPY or TRANSMIT

Wire Harnesses and Wires

PART NO.	DESCRIPTION	COMMENTS
510430P	Wire Harness Assembly	Models HDE107*A1502, HDE107*A1702, HDE107*C1502 and HDE107*C1702
510432P	Wire Harness Assembly	Models HDE507*A1502, HDE507*A1702, HDE507*C1502, HDE507*C1702, HDE607*A1502, HDE607*A1702, HDE607*C1502, HDE607*C1702, HDE707*A1502, HDE707*A1702, HDE707*C1502 and HDE707*C1702
500903	Wire Harness Assembly	Models HDG009*A3000 and HDG009*C3000
510429	Wire Harness Assembly	Models HDG009*A3008 and SDG009*A3000
502609	Gas Valve Wire Harness Assembly	Models HDG009*B3008, HDG109*B3013, SDG009*A3058, SDG109*A3058 and SDG109*B3013
510431	Wire Harness Assembly	Models HDG109*A3000, HDG109*C3000, SDG109*A1124, SDG109*A3000 and SDG109*A5412
N/A	Wire Harness Assembly	Model SDG409*A3000
510467	Wire Harness Assembly	Model SDG409*A3058
510401	Wire Harness Assembly	Models HDG109*A1102 and HDG109*C1102
510407	Wire Harness Assembly	Models HDG509*A1102, HDG509*C1102, HDG609*A1102, HDG709*A1102 and HDG709*C1102
510406	Wire Harness Assembly	Models SDE407*A3000 and SDE407*A4350
510404	Wire Harness Assembly	Models HDE007*A1702, HDE007*A3000, HDE007*C1702, HDE007*C3000, SDE007*A3000 and SDE007*A4350
510405	Wire Harness Assembly	Models HDG009*A1102 and HDG009*C1102
510400P	Wire Harness Assembly	Models HDE107*A3000, HDE107*C3000, SDE107*A1724, SDE107*A3000, SDE107*A4350 and SDE107*A5412
510456	Wire Harness Assembly	Models HDE007*B3003, HDE007*B3008, HDE007*B3010 and SDE007*B3018
510458	Wire Harness Assembly	Models HDE107*B3018 and SDE107*B3018
45001	18 Gauge Wire	Black; Order wire by foot; Order terminals and connectors as required
45380	12 Gauge Wire	Orange; Order wire by foot; Order terminals and connectors as required

*** Add Letter To Designate Color. L - Almond W - White**

N/A = Part no longer available

NOTE: Individual wires are not available separately. Order complete wire harness, or order wire by the foot. When applying terminals to wires, it is recommended that the terminals be soldered to the wires.

© Copyright, Alliance Laundry Systems LLC – DO NOT COPY or TRANSMIT

Parts Index

A

Access Panel
510069L 23
510069W 23

Access Panel Plate
510903 41

Accumulator Kit
510632P 7

Adhesive
511637 ..... 27, 29

Air Duct Assembly
510151 27

B

Bit Holder
24161 ..... 15, 23

Blower and Fan Kit
510717P 25

Blower Fan Assembly
510139 25

Blower Housing and Cover Kit
511969P 25

Blower Housing Seal
510238 25

Bolt
02505 ..... 7, 9, 11, 13
29651 7

Booster and Holding Coil
58804A 37
59063A 37

Bracket
510146 19

Bumper Pad
56128 41

Burner Assembly
510149 ..... 37, 39

C

Card Reader
39685 13

Card Reader Overlay
39676 13

Caution Label
500253 23

Clean Lint Label
502804 23

Coin Drop Assembly
200578 9
38462 9
38463 9
38464 9
38467 9
38472 9
38519 9
38521 9
38522 9
38963 9

Coin Funnel Kit
523P3 7

Coin Slide Extension
503733 7

Combustion Duct
510131 33
510132 35

Connector, 2 Circuit
58799 47

Connector, 3 Circuit
58800 45

Control Hood
502567L 15, 17
502567W 15, 17

Control Kit
M411883P 17
M414050P 17

Control Panel
501359L 17
501359W 17

Control Panel and Bracket Assembly
501738L 15
501738W 15

Cylinder Assembly
510265 27

Cylinder Baffle
503703 27

Cylinder Belt
511255 25

Cylinder Glide
510187 27

Cylinder Glide Bracket
510145 27

Cylinder Roller
510708P 29

Cylinder Roller Bracket
510100 29

Cylinder Seal Assembly
510207 29
510207P 27

D

Directional Exhaust Kit
528P3 41

Disconnect Power Warning Label
505281 19

Door Catch Assembly
510177 23

Door Handle Wedge
510129 21

Door Hinge
511036 21

Door Pull
510103L 21
510103W 21

Door Strike
510181 21

N/A items do not appear in index.

© Copyright, Alliance Laundry Systems LLC – DO NOT COPY or TRANSMIT

Door Strike Mount
510127 21
Dryer Base
510084 41
Dryer Door
510013L 21
510013W 21
Dual Overlay
39073 9

E

Elbow Shut-Off Valve
510205 ..... 37, 39
Electric Clearance Label
511005 43
Electrical Shock Label
502511 19
Exhaust Duct
510137 41
Exhaust Warning Label
500497 43
Extractor Tool
128P4 49
190P4 49

F

Fabric Selector Switch
61512 15
Felt Pad
500121 27
Female Piggyback Terminal
00361 47
Female Pin Terminal
00117 45
00130 45
Female Spade Terminal
00114 47
00115 47
00121 47
00124 47
00156 47
00189 47
00209 47
00223 47
00321 47
Female Tab Terminal
00344 47
Female Terminal
00188 49
00255 49
00256 49
Flag Insulated Terminal
00345 47
Flexible Venting Kit
521P3 41
Front Bulkhead Assembly
510266 27
Front Panel
510066L 23
510066W 23
Front Panel Seal
511056 23
Fuse
502592 19
502593 19
Fuse Carrier
502811 19
Fuse Holder Body
502591 19
Fuse Holder Bracket
502589 19

G

Gas Clearance Label
511004 ..... 23, 43
Gas Valve Assembly
502478 39
58804 37
60353 37
Gas Valve Mounting Bracket
510128 ..... 37, 39
Gas Valve Wire Harness Assembly
502609 ..... 39, 50
510530 37
Graphic Overlay
504113 17
511895 15
511896 15
511897 15
511900 15
511901 15
511904 15
511905 15
Grounding Clip
00161 47

H

Harness Strap
55881 45
Heat Duct Shroud
510101 ..... 33, 35
Heater Assembly
510324 31
510326 31
510327 31
510330 31
Heater Duct and Screw Assembly
510025P 31, 33, 35
Hood Back Plate
505798 ..... 15, 17
Housing, 10 Position
500338 49

I

Idler Lever
510133 25
Idler Lever and Wheel Assembly
510158 25

N/A items do not appear in index.

© Copyright, Alliance Laundry Systems LLC – DO NOT COPY or TRANSMIT

Idler Spring
510185 25
Idler Wheel and Bearing Assembly
510142 25
Igniter and Bracket Assembly
510184P 37
Igniter and Sensor Assembly
502995 39
Igniter Control
502994 39
Ignition Control Bracket
502425 39
Indicator Light
38280 15
Instruction Label
500628 7
502783 ..... 5, 7
Instruction Plate
500490 5
Insulated Female Terminal
00165 47

L

Lead-In Cord
59308 45
61605 45
Lead-In Cord Assembly
503597 45
510505 45
Lead-In Pipe Assembly
510204 ..... 37, 39
Leveling Leg
510135 41
Light
32464 15
32519 15
36967 15
Limit Thermostat
510701 31
510702 ..... 33, 35
Liner Door Seal
510147 21
Liner, Seal and Grill Assembly
510163WP 21
Lint Filter
503980 27
Lint Filter Cover
510502 27
L.P. Conversion Kit
401P3 37
458P3 ..... 37, 39
600P3 39

M

Male Pin Terminal
00116 45
00127 45
Male Tab Terminal
00139 47
Meter Case and Funnel Kit
524P3L 7
524P3W 7
Meter Case Assembly
38724L 9
38724W 9
Meter Case Bracket Gasket
35526 ..... 7, 9
Meter Case Gasket
26354 ..... 7, 9
Meter Case Lockdown Bracket
35525 ..... 7, 9
Meter Case Locking Bracket
30642 ..... 7, 9, 13
Meter Case Mounting Bracket Assembly
503456 41
Motor and Pulley Assembly
505843P 25
505869P 25
511629P 25
Motor Hub Ring Kit
590P3 25
Motor Mount
510060 25
Motor Mount Clamp
510180 25
Motor Pulley
500222 25
512196 25
Motor Switch Kit
501218P 25

N

Natural Gas Notice Label
501140 43
Notice Label, 15 Amp
500495 43
Notice Label, 20 Amp
500496 43
Notice Label, 30 Amp
500493 43
Nut
24205 15
27222 19
29786 ..... 5, 7, 9, 11, 13
29796 7
30647 ..... 7, 9, 13
52566 ..... 15, 17, 25
52947 15
56156 ..... 25, 29
N.G. Conversion Kit
402P3 37
459P3 ..... 37, 39

O

Outlet Cover
500820 ..... 31, 33, 35
Overlay Kit
38675 9
38676 9

N/A items do not appear in index.

© Copyright, Alliance Laundry Systems LLC – DO NOT COPY or TRANSMIT

P

Panel Kit
727P3L 41
727P3W 41

Panel Locator
56079 ..... 23, 41

Plug
23040 45

Plug, 2 Circuit
56266 45
56448 45

Power Cord Assembly
502786 45

Pre-Insulated Spade Terminal
00215 47

R

Ratchet Extension Tool
310P4 49

Rear Bulkhead Assembly
511082 29

Receptacle Housing
90789 47

Receptacle, 2 Circuit
56265 45
56451 45

Receptacle, 3 Circuit
23039 45

Relay
502501 19

Retaining Ring
23748 ..... 25, 29

Ring Terminal
00110 47
00111 47

Rubber Foot
501855 41

S

Screw
02916 ..... 5, 11, 13, 15, 17
03203 7
03950 7
23222 ..... 31, 37
23962 13
27328 5
31260 25
33561 25
36048 ..... 7, 9
39733 ..... 23, 41
500226 ..... 15, 17, 21
500824 25
501086 ..... 5, 7, 11, 15, 17, 19, 27
501285 ..... 27, 29
501524 17
502431 7
503673 ..... 7, 9, 13, 19
503688 .. 13, 19, 23, 25, 27, 29, 31, 33, 35, 37, 39, 41
505295 ..... 21, 27
51778 ..... 5, 11
51782 ..... 33, 35, 37, 39
56124 ..... 37, 39
61199 29
62588 27
62853 23

Secondary Coil
58804B 37
59063B 37

Security Case Gasket
37526 13

Sensor
510213 37

Service Door Assembly
35798L 7, 9, 13
35798W 7, 9, 13

Shaft
56461 ..... 25, 29

Slide Extension Kit
553P3 7

Slide Extension Modifier
501796 7

Spade Terminal
00245 47

Speed Clip
28835 23

Strain Relief
38384 47
502500 47
52113 47

Strain Relief Adapter
502496 47

Switch
504570 ..... 9, 23

Switch Assembly
55882 15

Switch Knob
39897 15

T

Terminal
00346 47
00347 47

Terminal Block
502517 29

Terminal Block Assembly
510190P 29

Terminal Block Label
501288 43

Terminal Block Shield
505768 29
510237 29

Terminal Extractor Tool
283P4 49

Thermal Fuse Assembly
511412 31

Thermistor
M414704 25

Thermistor Assembly
510523 25

Thermostat
504515 25

N/A items do not appear in index.

© Copyright, Alliance Laundry Systems LLC – DO NOT COPY or TRANSMIT

504517 25
510703 35
511887 25

Timer
501757 7
510524 5
510525 5
510526P 5

Timer Assembly
501754 7

Timer Bracket
503315 7

Timer Case Assembly
37733W 5, 11

Timer Knob
54678 5

Timer Plate
39481W 11

Timer Plate Assembly
500921W 5

Top Hinge
510136 41

Top Kit
511527LP 19
511527WP 19
511528LP 19
511528WP 19

Top Panel
502570L 19
502570W 19

Torx Bit
281P4 15
282P4 23

Transformer
M412477 19

Transformer Kit
511658P 19

U

Ultra Pod Terminal
00359 47
00360 45

V

Valve Assembly
60443 37

Voltage Warning Label
62104 43

W

Warning Label
500316 ..... 19, 43

Warning/Caution Label
500281 23

Washer
02431 ..... 5, 11, 13, 15, 17
03815 5
20279 5
21734 11
52549 ..... 25, 29
91176 15

Wire Clip
504034 45

Wire Harness Assembly
500903 50
510400P 50
510401 50
510404 50
510405 50
510406 50
510407 50
510429 50
510430P 50
510431 50
510432P 50
510456 50
510458 50
510467 50

Wire, 12 Gauge
45380 50

Wire, 18 Gauge
45001 50

N/A items do not appear in index.

© Copyright, Alliance Laundry Systems LLC – DO NOT COPY or TRANSMIT

Notes

© Copyright, Alliance Laundry Systems LLC – DO NOT COPY or TRANSMIT